CDB43131K Kit Manual

Features

- Configurable serial audio headers for PCM, DSD and DoP audio
- Headphone and line outputs
- Analog and S/PDIF audio input
- USB audio module capability
- WISCE™ I²C-based software control
- Windows® compatible

Description

The CDB43131K is a dedicated platform for testing and evaluating the CS43131. The CS43131 is a high-performance audio DAC with integrated impedance detection and headphone drivers. To allow comprehensive testing and evaluation of the performance of the CS43131, extensive software-configurable options are available through the CDB43131 evaluation kit. The kit also included the CDB-HDR-MEAS, for measuring the 130 dB dynamic range performance of the CS43131.

Software options, such as register settings for the CS43131, are configured via the WISCE software tool, which communicates with the CDB43131K via an Aardvark I²C/SPI host adapter from a Windows computer, or via Mini-USB cable.

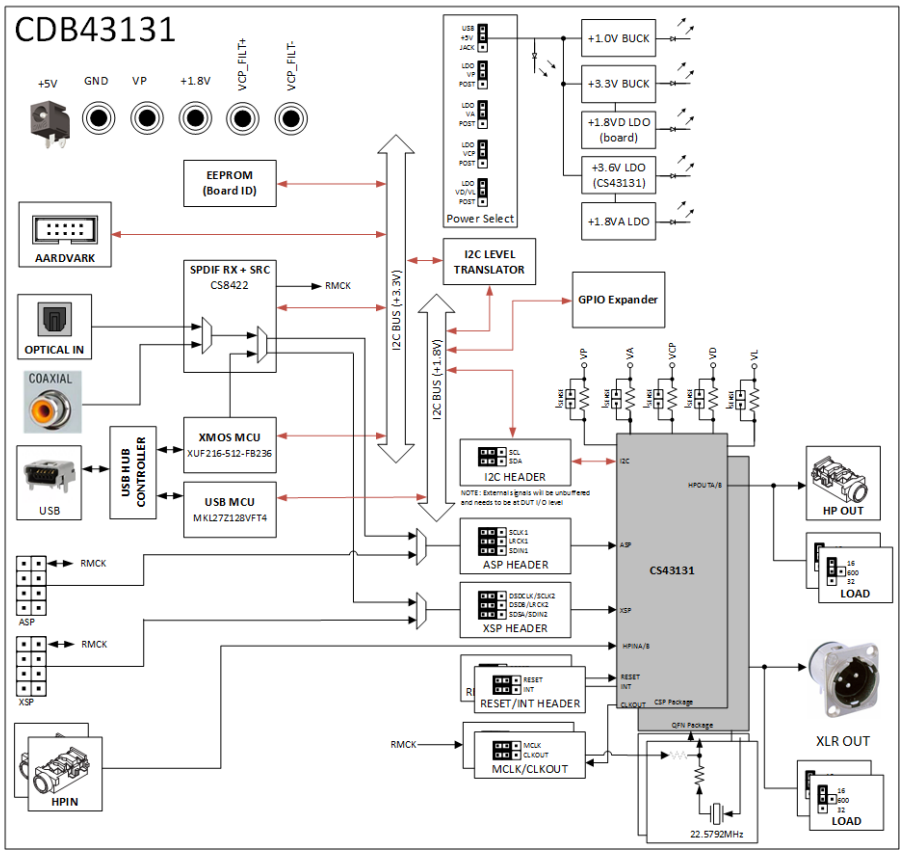

Figure 1 CDB43131 Board Block Diagram

Copyright © 2018 Cirrus Logic, Inc. and Cirrus Logic International Semiconductor Ltd. All rights reserved.

Table of Contents

1 CDB43131K Kit Overview ... 3
1.1 CDB43131 Board ... 3
1.2 CDB-HDR-MEAS Board ... 3
2 CDB43131 Board Overview ... 4
2.1 Power Supply Circuitry ... 5
2.2 Digital Audio Input ... 6
2.3 Analog Audio Input ... 9
2.4 Analog Audio Output ... 10
2.5 I^2C Control ... 10
2.6 LEDs ... 11
2.7 List of Headers and Jumper Settings ... 12
2.8 Codec MCLK Selection ... 14
2.9 Clock Sources ... 14
3 Board Control Register Quick Reference ... 15
3.1 Register Descriptions ... 15
4 CDB-HDR-MEAS High Dynamic Range Measurement Preamplifier ... 19
4.1 Powering the CDB-HDR-MEAS ... 19
4.2 How the CDB-HDR-MEAS Works ... 20
5 Testing the CS43131 using WISCE Software ... 21
5.1 Launching WISCE Software ... 21
5.2 Loading the CDB43131 board Panel and Register Map ... 22
5.3 Loading the CS43131 Plugins and Register Map ... 24
5.4 Initializing the Devices on the CDB43131 Board ... 26
5.5 CS43131 Plugin ... 27
6 Testing Various Use cases ... 44
6.1 Data Flow for Various Use Cases ... 45
6.2 Measuring Dynamic Range and THD+N for the CS43131 ... 48
6.3 Measured Results ... 58
7 Revision History ... 59

1 CDB43131K Kit Overview

The CDB43131K kit consists of an evaluation board, a high dynamic range (HDR) measurement board, and a USB cable. Each of these component boards is described in the following sections.

1.1 CDB43131 Board

The CDB43131 is shown in the following figure.

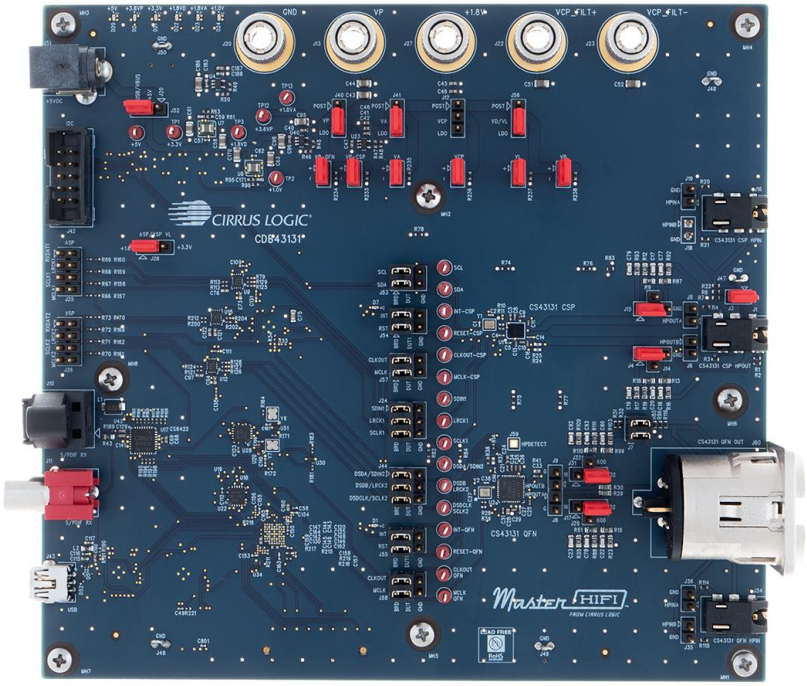

Figure 2 CDB43131 Base Board

1.2 CDB-HDR-MEAS Board

The CDB-HDR-MEAS is shown in the following figure. This board is used for measuring the very low HDR of the device with an Audio Precision SYS-2700 or APx555 audio analyzer.

Figure 3 CDB-HDR-MEAS Board

2 CDB43131 Board Overview

The CDB43131 is the board for evaluating the performance of the CS43131. It supports multiple power supplies and signal I/O configurations.

The CDB43131 board uses five buffers with direction control to direct clock from the digital input sources to/from the CS43131 DUTs. Two buffers, the PCM/DoP buffer and the DSD/DoP buffer, support voltage translation from 3.3 V to 1.8 V and vice versa. The voltage selection is done through headers: J28 for the PCM/DoP buffer and the DSD/DoP buffer. The S/PDIF buffer is a unidirectional buffer and supports 3.3 V to 1.8 V translation. The remaining buffers only support 1.8 V signals. These buffers are controlled by an I/O Expander. The I/O Expander can be controlled through its I^{2}C interface. The register map for I/O Expander is described in Section 3. The direction of clock signals is determined by the CS43131's operating mode (master or slave mode).

The CDB43131 can also communicate with a smart codec through the use of J42. The purpose of using a smart codec is to allow the user to perform listening tests with various equalizer (EQ) filters based on the impedance of the attached headphone. The CDB43131 board allows the PCM input to be routed to the smart codec. The codec can then apply an EQ filter on this data, based on the impedance of the attached headphone and send EQ-filtered data to the CS43131, for an optimal listening experience. The following diagram shows an overview of the CDB43131 board.

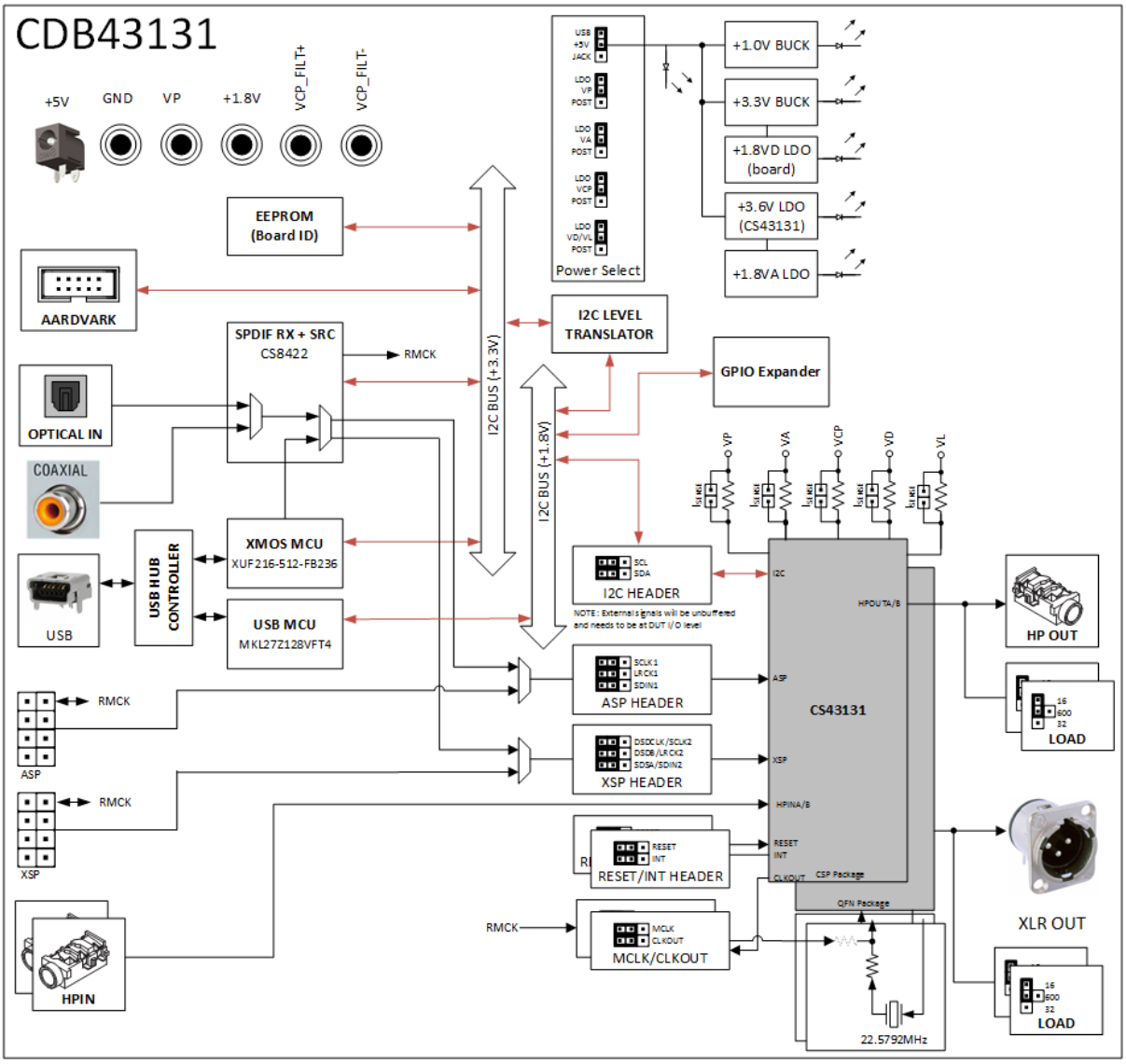

Figure 4 CDB43131 Block Diagram

2.1 Power Supply Circuitry

The CDB43131 board is powered from a 5-volt, 1.2-amp AC adapter or via the +5-volt bus from the USB connector. All the supply rails for both the smart codec and the CS43131s are generated using a combination of switched-mode power supplies (switchers) and LDOs. In addition to these internal supplies, the CDB43131 board also provides the option of powering the CS43131 supply rails from external bench supplies via banana jacks.

The switchers and LDOs step down the +5 V supply to 3.6 V, 3.3 V, 1.0 V, 1.8 V (analog), and 1.8 V (digital) levels.

If the device is set into External VCP_FILT Supply Mode and bypass the internal Class-H charge pump circuit, then a ±3-volt supply must be applied to VCP_FILT+ and VCP_FILT-. The banana jacks are connected to each device through a set of resistors (R24/R25 for the CSP device, and R40/R41 for the QFN device). These resistors are unpopulated by default and will need to be populated with a 0-Ω resistor to connect the jack to the DUT.

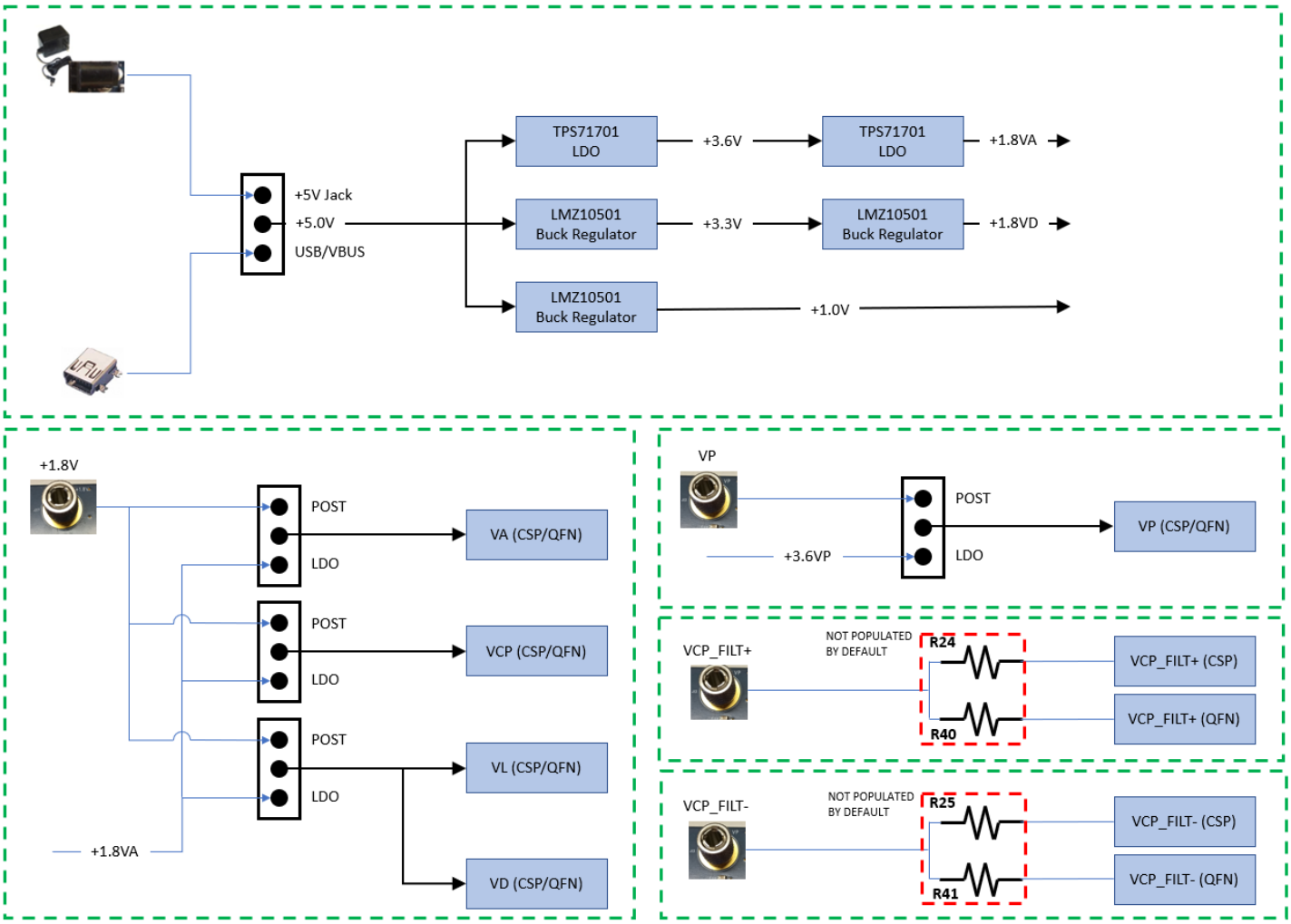

Figure 5 CDB43131 Power Supplies

2.2 Digital Audio Input

2.2.1 Serial Audio I/O Headers

Headers J25 and J26, labeled ASP and XSP respectively, provide an interface for serial audio clocks and data. The source of the clocks and data can be an external audio source such as a Audio Precision audio analyzer. The header signals are described in the table below. The logic level on these pins is selectable by jumping J28 to 3.3 V or 1.8V.

Table 1 Serial Audio Header Pinout

Reference Designator	Pins	Pin Designation	Direction	Description
J25	7	MCLK	I/O	Master clock
	5	SCLK	I/O	Bit clock
	3	LRCLK	I/O	Frame clock
	1	RXDAT	Input	Serial data
	2,4,6,8	Ground	Ground reference	Board ground
J26	7	MCLK	I/O	Master clock
	5	SCLK	I/O	Bit clock
	3	LRCLK	I/O	Frame clock
	1	RXDAT	Input	Serial data
	2,4,6,8	Ground	Ground reference	Board ground

Audio signals to/from these headers are routed to/from the CS43131 using voltage-level translation buffers. The direction of clock and data through these buffers is controlled using on-board TCA6424 I/O Expander IC. U9, U12, and U15 translate the signals on J25 and J26 from a voltage of 3.3 V or 1.8 V to the operational voltage of 1.8 V. The ASP signals are then fed into J24, while the XSP signals are fed into J44. These 3x3 pin headers are for passing the I^2S data from the CS8422 S/PDIF transceiver to the DUTs.

To avoid the latency caused by buffers for higher clock frequencies like 352.8 kHz or 384 kHz, the user can connect the external audio source directly to pins on headers J24 and J44. The pinouts for headers J24 and J44 are shown in the following tables.

Table 2 Pinouts for Header J24

Pin #	Signal
1	SCLK1 from Buffer
2	SCLK1 to DAC
4	LRCLK1 from Buffer
5	LRCLK1 to DAC
7	SDIN1 from Buffer
8	SDIN1 to DAC
3,6,9	Ground

Table 3 Pinouts for Header J44

Pin #	Signal
1	SCLK2 from Buffer
2	SCLK2 to DAC
4	LRCLK2 from Buffer
5	LRCLK2 to DAC
7	SDIN2 from Buffer
8	SDIN2 to DAC
3,6,9	Ground

To source the signals from the output of the buffers to the DAC, place jumpers between the two columns of pins labeled BRD and DUT. For example, in order to send SCLK1, LRCLK1 and SDIN1 signals from the buffer to the DAC, place jumpers between pins of the BRD and DUT group as shown in the following figure.

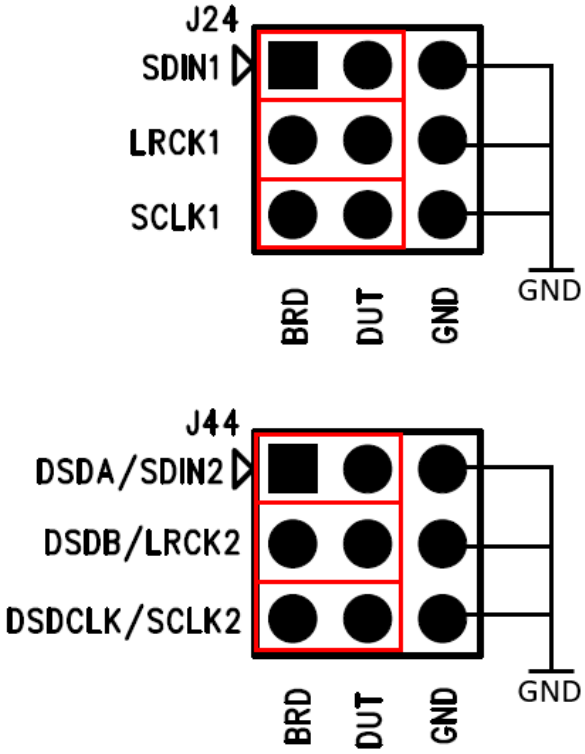

Figure 6 Jumper Settings to Route Signals from Buffers to DUT

To source the signals from external audio source like a Audio Precision APx555, connect the cable that fits onto a 2-pin header onto the pins labeled DUT and GND. For example, in order to send SCLK1, LRCLK1 and SDIN1 signals from a APx to the DAC, connect the BITCLK output from the APx to the SCLK1 pins in the AP group, Frame CLK output from the APx to LRCLK1 pins in the AP group, and the RXDAT1 output from the APx to SDIN1 pins in the AP group as shown in the following figure.

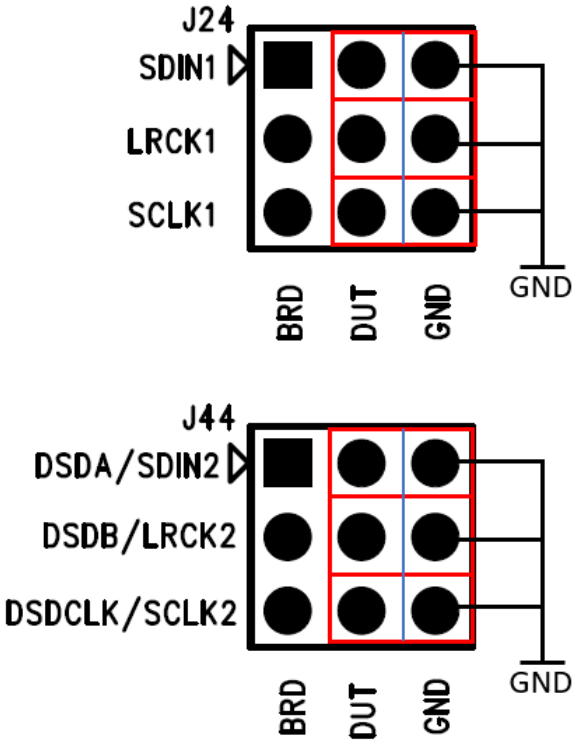

Figure 7 External Audio Source to DUT

2.2.2 S/PDIF Receiver

The CS8422 S/PDIF receiver provides two-channel digital input either from an optical or coax connector. The CS8422 can support sample rates up to 211 kHz and data output with either 16-, 18-, 20-, or 24-bit word lengths. Make sure that only one source, either S/PDIF or coax, is used at one time to provide the input. The CS8422 is configured to operate in Hardware Mode.

2.3 Analog Audio Input

The CDB43131 features a 1/8" headphone jack for each the CSP (J16) and QFN (J34). Situated next to each headphone jack are a pair of testpoints (J18/J19 and J35/J36, respectively) for connecting to an APx.

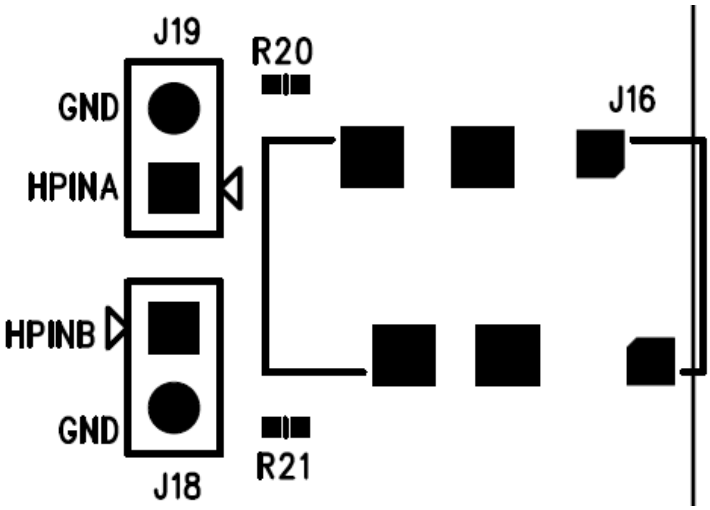

Figure 8 1/8" Headphone Jack and APx connectors for CSP

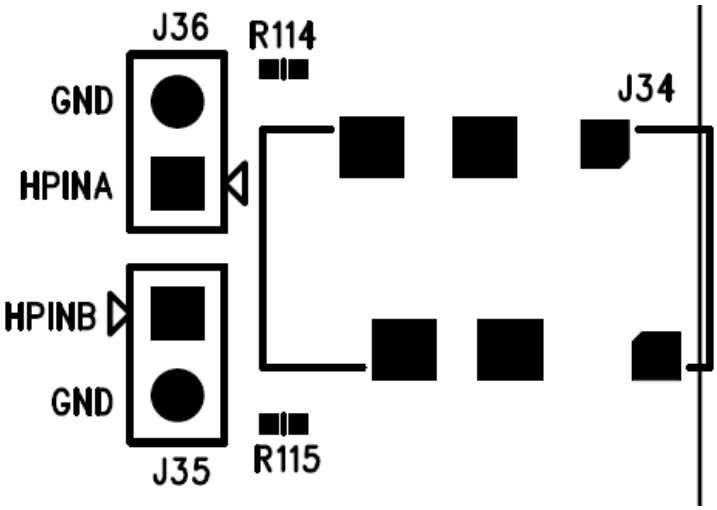

Figure 9 1/8" Headphone Jack and APx connectors for QFN

2.4 Analog Audio Output

The CDB43131 board has one 1/8" stereo headphone output jack (J1) for the CSP and one XLR cable output jack (J60) for the QFN.

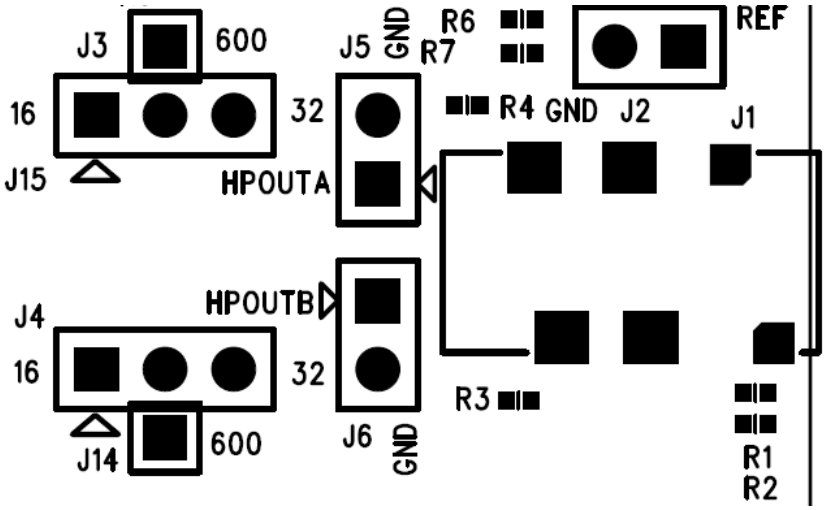

Figure 10 1/8" Headphone Jack/APx Connectors/Loading Jumpers for CSP

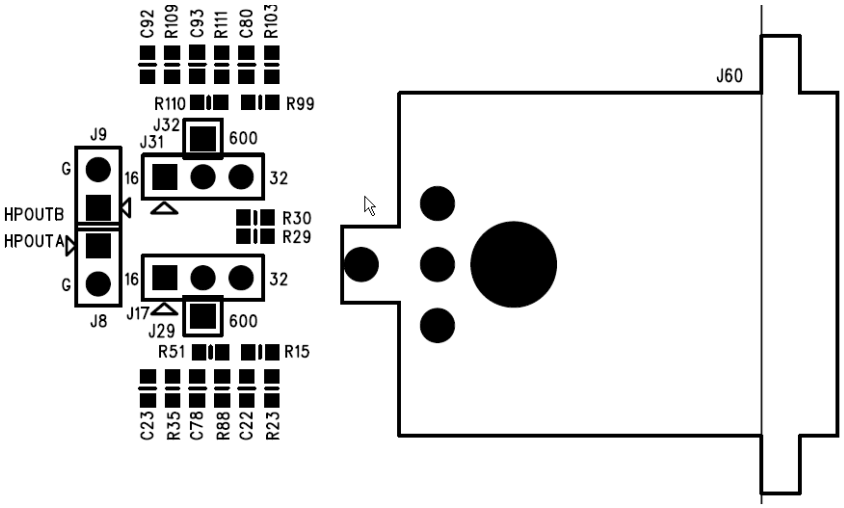

Figure 11 XLR Output/APx Connectors/Loading Jumpers for QFN

2.5 I²C Control

Header J42 (labeled I²C/SPI) provides an interface to connect a Total Phase Aardvark I²C/SPI Host Adapter. The header signals are described in the following table. The logic level on these pins is 3.3 V. Through this header, a user can communicate with a smart codec, the TCA6424 I/O Expander, and the CS43131.

Table 4 I2C/SPI Header Pinout

Header	Pins	Designation	Description
J42	1	I2C_SCL	I²C clock
	3	I2C_SDA	I²C data
	5	SPI_MISO	SPI master in slave out
	7	SPI_SCLK	SPI clock
	9	SPI_SS	SPI chip select
	8	SPI_MOSI	SPI master out slave in
	2, 10	GND	Ground reference
	4, 6	NC	No connect

2.6 LEDs

The status LEDs on the CDB43131 board show the status of the power rails and S/PDIF input. A summary of the LEDs is shown in the table below.

Table 5 Status LEDs

LED Function	LED Reference	LED Color	Description
INT_QFN	D1	Orange	Interrupt from QFN
		OFF	No Interrupt
+3.6VP	D2	Green	Presence of +3.6 V rail
VP	D7	Orange	Interrupt from CSP
		OFF	No Interrupt
+5V	D20	Green	Presence of the +5 V rail
+3.3V	D21	Green	Presence of the +3.3 V rail
+1.8VD	D22	Green	Presence of the +1.8 VD rail
+1.8VA	D23	Green	Presence of the +1.8 VA rail
+1.0V	D24	Off	Presence of the +1.0 V rail

2.7 List of Headers and Jumper Settings

The following table lists all the available headers, jacks, and plugs on CDB43131 board.

Table 6 Header and Jumper Settings

Reference Designator	Connection	Type	I/O	Description
J1	CSP-HPOUT	3.5-mm headphone jack	O	The headphone out jack for the CS43131 CSP device
J2	CSP-HPOUT-REF	2x1 header	—	This header is for tying HPREF(A/B) to GND
J4	CSP-HPOUTB Loading	3x1x1 header	—	Selectable loading resistance of 16/32/600 Ω for CSP-HPOUTA
J5	CSP-HPOUTA Test Point	2x1 header	O	2-pin test point for Audio Precision
J6	CSP-HPOUTB Test Point	2x1 header	O	2-pin test point for Audio Precision
J7	QFN-GND-REF-SEL	2x2 header	—	Jumper between 1-3 and 2-4 to make outputs differential. Jumper between 1-2 and 3-4 to make outputs single ended
J8	QFN-HPOUTA Test Point	2x1 header	O	2-pin test point for Audio Precision
J9	QFN-HPOUTB Test Point	2x1 header	O	2-pin test point for Audio Precision
J10	Optical S/PDIF IN	Optical connector	I	Optical connector for S/PDIF Signals
J11	Coaxial S/PDIF IN	RCA connector	I	Coaxial connector for S/PDIF Signals
J12	VCP Source Select	3x1 header	—	Jumper between 1-2 to get VCP from 1.8 V banana jack (J27). Jumper between 2-3 to get VCP from 1.8 VA LDO
J13	VP Banana Jack	Banana jack	I	External source for 3.6 VP
J15	CSP-HPOUTA Loading	3x1x1 header	—	Selectable loading resistance of 16/32/600 Ω for CSP-HPOUTA
J16	CSP-HPIN	3.5mm headphone jack	I	The headphone-in jack for the CS43131 CSP device
J17	QFN-HPOUTA Loading	3x1x1 header	—	Selectable loading resistance of 16/32/600 Ω for QFN-HPOUTA
J18	CSP-HPINB Test Point	2x1 header	O	2-pin test point for Audio Precision
J19	CSP-HPINA Test Point	2x1 header	O	2-pin test point for Audio Precision
J20	GND Banana Jack	Banana jack	I	GND
J21 (Rev B Only)	USB Data Select	3x1 header	—	If ENABLE is selected, the CDB will use the USB connection for data and power. If DISABLE is selected, the CDB will use the USB connection for power only.
J22	VCP_FILT+ Banana Jack	Banana jack	I	External source for VCP_FILT+
J23	VCP_FILT- Banana Jack	Banana jack	I	External source for VCP_FILT-
J24	ASP DUT Connection	3x3 header	—	Connect shunt between (DUT-BRD) to connect DUT and ASP data. Disconnect shunt and use 2-pin test point for Audio Precision between (DUT-GND) to measure ASP data directly
J25	ASP DATA	2x4 header	I/O	Header for MCLK1/LRCLK1/SCLK1/RX Data1
J26	XSP DATA	2x4 header	I/O	Header for MCLK2/LRCLK2/SCLK2/RX Data2
J27	1.8V Banana Jack	Banana jack	I	External Source for +1.8 V
J28	ASP/XSP VL	3x1 header	—	Shunt between pins 1-2 for ASP/XSP to be translated to 3.3 V. Shunt between pins 2-3 for ASP/XSP to be translated to 1.8 V
J31	QFN-HPOUTB Loading	3x1x1 header	—	Selectable loading resistance of 16/32/600 Ω for QFN-HPOUTB
J34	QFN-HPIN	3.5mm headphone jack	I	The headphone-in jack for the CS43131 QFN device

Reference Designator	Connection	Type	I/O	Description
J35	QFN-HPINB Test Point	2x1 header	O	2-pin test point for Audio Precision
J36	QFN-HPINA Test Point	2x1 header	O	2-pin test point for Audio Precision
J40	VP Source Select	3x1 header	—	Jumper between 1-2 to get VP from VP banana jack (J13). Jumper between 2-3 to get VP from 3.6-V LDO
J41	VA Source Select	3x1 header	—	Jumper between 1-2 to get VA from 1.8 V banana jack (J27). Jumper between 2-3 to get VA from 1.8 VA LDO
J42	Aardvark I2C Interface	5x2 header (shrouded)	I/O	Interface connector for Aardvark I^2C test module
J43	USB Connector	Mini-USB receptacle	I/O	Provides USB Data and +5 V power to the CDB
J44	XSP DUT Connection	3x3 header	—	Connect shunt between (DUT-BRD) to connect DUT and XSP data. Disconnect shunt and use 2-pin test point for Audio Precision between (DUT-GND) to measure XSP data directly
J45	XMOS Connector	10x2 right-angle connector	I/O	Connects to XMOS programmer
J46-J50	GND Testpoint	GND testpoint	O	GND Testpoint
J51	External 5V Supply	2.5mm PIN receptacle	I	Provides external +5 V if USB VBUS is not used
J52	V5 Source Select	3x1 header	—	Jumper between 1-2 to get 5 V from external supply (J52). Jumper between 2-3 to get 4 V from USB VBUS (J43)
J53	I2C DUT Connection	3x2 header	—	Connect shunt between (DUT-BRD) to connect DUT and I2C data. Disconnect shunt and use 2-pin test point for Audio Precision between (DUT-GND) to measure I2C data directly
J54	/RST /INT CSP Connection	3x2 header	—	Connect shunt between (DUT-BRD) to connect /RST and /INT data. Disconnect shunt and use 2-pin test point for Audio Precision between (DUT-GND) to measure /RST and /INT data directly
J55	/RST /INT QFN Connection	3x2 header	—	Connect shunt between (DUT-BRD) to connect /RST and /INT data. Disconnect shunt and use 2-pin test point for Audio Precision between (DUT-GND) to measure /RST and /INT data directly
J56	VD/VL Source Select	3x1 header	—	Jumper between 1-2 to get VD/VL from 1.8 V banana jack (J27). Jumper between 2-3 to get VD/VL from 1.8 VA LDO
J57	MCLK CSP Connection	3x2 header	—	Connect shunt between (DUT-BRD) to connect MCLK. Disconnect shunt and use 2-pin test point for Audio Precision between (DUT-GND) to measure MCLK directly
J58	MCLK QFN Connection	3x2 header	—	Connect shunt between (DUT-BRD) to connect MCLK. Disconnect shunt and use 2-pin test point for Audio Precision between (DUT-GND) to measure MCLK directly
J60	QFN-XLR OUT	XLR connector	O	The XLR out jack for the CS43131 QFN Device
J802	MCU Programmer	5x2 header (shrouded)	I/O	Programmer for MCU

2.7.1 Current Measurement Headers

The table below shows a list of current measurement headers and the associated rails. To measure current of a particular voltage rail, remove the jumper and place a current probe across the pins of the header.

Table 7 Current Measurement Headers

Header	Voltage Rail
VP-QFN	VP-QFN
VP-CSP	VP-CSP
VA	VA
VCP	VCP
VL	VL
VD	VD

2.7.2 Push-Button Resets (Revision B Only)

There are 2 SPST push buttons for resetting the board in case the system enters an unknown state. There are 2 buttons: S1 for a system-wide reset, and S2 for a DAC-only reset.

Table 8 Push-Button Resets

Button Name	Descriptor	Reset Tied To
S1	SYS_RESET	CS43131-CSP, CS43131-QFN, CS8422 Smart Codec, USB MCU, USB HUB, XMOS
S2	DAC_RESET	CS43131-CSP, CS43131-QFN

2.8 Codec MCLK Selection

The MCLK input to the smart codec can come either from the on-board 24.576 MHz clock oscillator, a 22.579 MHz clock oscillator, MCLK1 from ASP(J25), MCLK2 from XSP(J26) or from the CLKOUT pin on the DAC or the MCLK output from an external audio source. The selection is controlled by WISCE software.

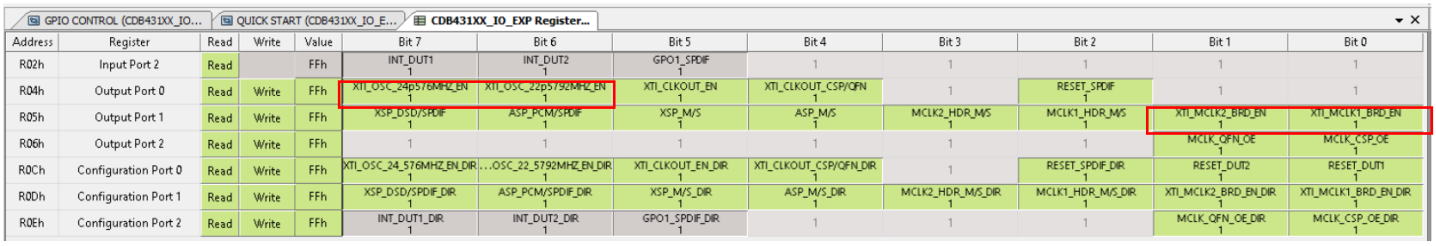

GPIO CONTROL (CDB431XX_IO... | QUICK START (CDB431XX_IO_E... | CDB431XX_IO_EXP Register...

Address	Register	Read	Write	Value	Bit 7	Bit 6	Bit 5	Bit 4	Bit 3	Bit 2	Bit 1	Bit 0
R02h	Input Port 2	Read		FFh	INT_DUT1 1	INT_DUT2 1	GPO1_SPDIF 1	1	1	1	1	1
R04h	Output Port 0	Read	Write	FFh	XTI_OSC_24p576MHZ_EN 1	XTI_OSC_22p5792MHZ_EN 1	XTI_CLKOUT_EN 1	XTI_CLKOUT_CSP/QFN 1	1	RESET_SPDIF 1	1	1
R05h	Output Port 1	Read	Write	FFh	XSP_DSD/SPDIF 1	ASP_PCM/SPDIF 1	XSP_M/S 1	ASP_M/S 1	MCLK2_HDR_M/S 1	MCLK1_HDR_M/S 1	XTI_MCLK2_BRD_EN 1	XTI_MCLK1_BRD_EN 1
R06h	Output Port 2	Read	Write	FFh	1	1	1	1	1	1	MCLK_QFN_OE 1	MCLK_CSP_OE 1
R0Ch	Configuration Port 0	Read	Write	FFh	XTI_OSC_24_576MHZ_EN_DIR 1	...OSC_22_5792MHZ_EN_DIR 1	XTI_CLKOUT_EN_DIR 1	XTI_CLKOUT_CSP/QFN_DIR 1	1	RESET_SPDIF_DIR 1	RESET_DUT2 1	RESET_DUT1 1
R0Dh	Configuration Port 1	Read	Write	FFh	XSP_DSD/SPDIF_DIR 1	ASP_PCM/SPDIF_DIR 1	XSP_M/S_DIR 1	ASP_M/S_DIR 1	MCLK2_HDR_M/S_DIR 1	MCLK1_HDR_M/S_DIR 1	XTI_MCLK2_BRD_EN_DIR 1	XTI_MCLK1_BRD_EN_DIR 1
R0Eh	Configuration Port 2	Read	Write	FFh	INT_DUT1_DIR 1	INT_DUT2_DIR 1	GPO1_SPDIF_DIR 1	1	1	1	MCLK_QFN_OE_DIR 1	MCLK_CSP_OE_DIR 1

Figure 12 CODEC MCLK Selection

2.9 Clock Sources

The CDB43131 board has 2 separate onboard 22.5792 MHz crystals to act as the MCLK source for the CS43131 CSP and QFN DUTs. In addition to the crystal, the board also provides an option to supply MCLK either from an external source, such as a function generator. These oscillators are Y1 (CSP) and Y2(QFN). By default, these crystals are enabled. In order to use an external clock source, depopulate R11 (CSP) and R28 (QFN) and solder in a 0-Ω resistor in R10(CSP) and R39(QFN). The external MCLK is selected in the IO expander in the WISCE software.

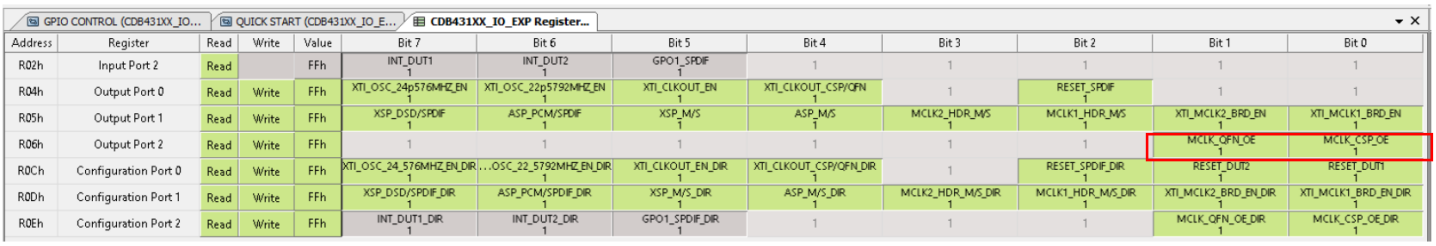

GPIO CONTROL (CDB431XX_IO... | QUICK START (CDB431XX_IO_E... | CDB431XX_IO_EXP Register...

Address	Register	Read	Write	Value	Bit 7	Bit 6	Bit 5	Bit 4	Bit 3	Bit 2	Bit 1	Bit 0
R02h	Input Port 2	Read		FFh	INT_DUT1 1	INT_DUT2 1	GPO1_SPDIF 1	1	1	1	1	1
R04h	Output Port 0	Read	Write	FFh	XTI_OSC_24p576MHZ_EN 1	XTI_OSC_22p5792MHZ_EN 1	XTI_CLKOUT_EN 1	XTI_CLKOUT_CSP/QFN 1	1	RESET_SPDIF 1	1	1
R05h	Output Port 1	Read	Write	FFh	XSP_DSD/SPDIF 1	ASP_PCM/SPDIF 1	XSP_M/S 1	ASP_M/S 1	MCLK2_HDR_M/S 1	MCLK1_HDR_M/S 1	XTI_MCLK2_BRD_EN 1	XTI_MCLK1_BRD_EN 1
R06h	Output Port 2	Read	Write	FFh	1	1	1	1	1	1	MCLK_QFN_OE 1	MCLK_CSP_OE 1
R0Ch	Configuration Port 0	Read	Write	FFh	XTI_OSC_24_576MHZ_EN_DIR 1	...OSC_22_5792MHZ_EN_DIR 1	XTI_CLKOUT_EN_DIR 1	XTI_CLKOUT_CSP/QFN_DIR 1	1	RESET_SPDIF_DIR 1	RESET_DUT2 1	RESET_DUT1 1
R0Dh	Configuration Port 1	Read	Write	FFh	XSP_DSD/SPDIF_DIR 1	ASP_PCM/SPDIF_DIR 1	XSP_M/S_DIR 1	ASP_M/S_DIR 1	MCLK2_HDR_M/S_DIR 1	MCLK1_HDR_M/S_DIR 1	XTI_MCLK2_BRD_EN_DIR 1	XTI_MCLK1_BRD_EN_DIR 1
R0Eh	Configuration Port 2	Read	Write	FFh	INT_DUT1_DIR 1	INT_DUT2_DIR 1	GPO1_SPDIF_DIR 1	1	1	1	MCLK_QFN_OE_DIR 1	MCLK_CSP_OE_DIR 1

Figure 13 EXT MCLK Selection

3 Board Control Register Quick Reference

Address	Register	Read	Write	Value	Bit 7	Bit 6	Bit 5	Bit 4	Bit 3	Bit 2	Bit 1	Bit 0
R02h	Input Port 2	Read		FFh	INT_DUT1 1	INT_DUT2 1	GPO1_SPDIF 1	1	1	1	1	1
R04h	Output Port 0	Read	Write	FCh	XTI_OSC_24p576MHZ_EN 1	XTI_OSC_22p5792MHZ_EN 1	XTI_CLKOUT_EN 1	XTI_CLKOUT_CSP/QFN 1	1	RESET_SPDIF 1	0	0
R05h	Output Port 1	Read	Write	FFh	XSP_DSD/SPDIF 1	ASP_PCM/SPDIF 1	XSP_M/S 1	ASP_M/S 1	MCLK2_HDR_M/S 1	MCLK1_HDR_M/S 1	XTI_MCLK2_BRD_EN 1	XTI_MCLK1_BRD_EN 1
R06h	Output Port 2	Read	Write	FFh	1	1	1	1	1	1	MCLK_QFN_OE 1	MCLK_CSP_OE 1
R0Ch	Configuration Port 0	Read	Write	0Bh	XTI_OSC_24_576MHZ_EN_DIR 0	XTI_OSC_22_5792MHZ_EN_DIR 0	XTI_CLKOUT_EN_DIR 0	XTI_CLKOUT_CSP/QFN_DIR 0	1	RESET_SPDIF_DIR 0	RESET_DUT2 1	RESET_DUT1 1
R0Dh	Configuration Port 1	Read	Write	00h	XSP_DSD/SPDIF_DIR 0	ASP_PCM/SPDIF_DIR 0	XSP_M/S_DIR 0	ASP_M/S_DIR 0	MCLK2_HDR_M/S_DIR 0	MCLK1_HDR_M/S_DIR 0	XTI_MCLK2_BRD_EN_DIR 0	XTI_MCLK1_BRD_EN_DIR 0
R0Eh	Configuration Port 2	Read	Write	FCh	INT_DUT1_DIR 1	INT_DUT2_DIR 1	GPO1_SPDIF_DIR 1	1	1	1	MCLK_QFN_OE_DIR 0	MCLK_CSP_OE_DIR 0

Figure 14 CDB43131 IO EXP Registers

3.1 Register Descriptions

3.1.1 Output Port 0

Address: 0x04	Default: 0xFC	R/W

Bit Position	7	6	5	4	3	2	1	0
Bitfield Name	XTI_OSC_24p576MHZ_EN	XTI_OSC_22p5792MHZ_EN	XTI_CLKOUT_EN	XTI_CLKOUT_CSP/QFN	RESERVED	RESET_SPDIF	RESERVED	RESERVED
Default Value	1	1	1	1	X	1	X	X

Bits	Name	Description
7	XTI_OSC_24p576MHZ_EN	Enable 24.576 MHz CLK to be used as input to CODEC 0 Enabled 1 Disabled (Default)
6	XTI_OSC_22p5792MHZ_EN	Enable 22.5792 MHz CLK to be used as input to CODEC 0 Enabled 1 Disabled (Default)
5	XTI_CLKOUT_EN	Select SPDIF Clock Master 0 External CLK 1 CS43131 CLKOUT (Default)
4	XTI_CLKOUT_CSP/QFN	Select Device to be SPDIF Clock Master 0 CSP CLKOUT 1 QFN CLKOUT (Default)
3	Reserved	—
2	Reset_SPDIF	Enable SPDIF Buffer 0 Disabled 1 Enabled (Default)
1:0	Reserved	—

3.1.2 Output Port 2

Address: 0x05	Default: 0x0F	R/W

Bit Position	7	6	5	4	3	2	1	0
Bitfield Name	XSP_DSD/SPDIF	ASP_PCM/SPDIF	XSP_M/S	ASP_M/S	MCLK2_HDR_M/S	MCLK1_HDR_M/S	XTI_MCLK2_BRD_EN	XTI_MCLK1_BRD_EN
Default Value	1	1	1	1	0	0	0	0

Bits	Name	Description
7	XSP_DSD/SPDIF	Set Codec in DSD/SPDIF Mode 0 DSD 1 SPDIF (Default)
6	ASP_PCM/SPDIF	Set Codec in PCM/SPDIF Mode 0 PCM 1 SPDIF (Default)
5	XSP_M/S	Set XSP as Master/Slave 1 Master (Default) 0 Slave
4	ASP_M/S	Set ASP as Master/Slave 1 Master (Default) 0 Slave
3	MCLK2_HDR_M/S	Set Codec as Master to MCLK2 1 Master (Default) 0 Slave
2	MCLK1_HDR_M/S	Set Codec as Master to MCLK1 1 Master (Default) 0 Slave
1	XTI_MCLK2_BRD_EN	Enable ASP MCLK to be used as input to CODEC 0 Enabled 1 Disabled (Default)
0	XTI_MCLK1_BRD_EN	Enable XSP MCLK to be used as input to CODEC 0 Enabled 1 Disabled (Default)

3.1.3 Output Port 3

Address: 0x06	Default: 0xFF	R/W

Bit Position	7	6	5	4	3	2	1	0
Bitfield Name	Reserved						MCLK_QFN_OE	MCLK_CSP_OE
Default Value	x	x	x	x	x	x	1	1

Bits	Name	Description
7:2	Reserved	—
1	MCLK_QFN_OE	Set Codec as Master to CSP 1 Master (Default) 0 Slave
0	MCLK_CSP_OE	Set Codec as Master to QFN 1 Master (Default) 0 Slave

3.1.4 Port Config 1

Address: 0x0C	Default: 0x0B	R/W

Bit Position	7	6	5	4	3	2	1	0
Bitfield Name	XTI_OSC_24_576MHZ_EN_DIR	XTI_OSC_22_5792HZ_EN_DIR	XTI_CLKOUT_EN_DIR	XTI_CLKOUT_CSP/QFN_DIR	Reserved	RESET_SPDIF_DIR	RESET_DUT2	RESET_DUT1
Default Value	0	0	0	0	x	0	1	1

Bits	Name	Description
7	XTI_OSC_24_576MHZ_EN_DIR	Direction of the XTI_OSC_24_576MHz_EN signal 0 Output (Default) 1 Input
6	XTI_OSC_22_5792HZ_EN_DIR	Direction of the XTI_OSC_24_5792MHz_EN signal 0 Output (Default) 1 Input
5	XTI_CLKOUT_EN_DIR	Direction of the XTI_CLKOUT_EN signal 0 Output (Default) 1 Input
4	XTI_CLKOUT_CSP/QFN_DIR	Direction of the XTI_CLKOUT_CSP/QFN signal 0 Output (Default) 1 Input
3	Reserved	—
2	RESET_SPDIF_DIR	Direction of the RESET_SPDIF signal 0 Output (Default) 1 Input
1	RESET_DUT2	Reset DUT2 0 Disabled 1 Enabled (Default)
0	RESET_DUT1	Reset DUT1 0 Disabled 1 Enabled (Default)

3.1.5 Port Config 2

Address: 0x0D	Default: 0x00	R/W

Bit Position	7	6	5	4	3	2	1	0
Bitfield Name	XSP_DSD/SPDIF_DIR	ASP_DSD/SPDIF_DIR	XSP_M/S_DIR	ASM_M/S_DIR	MCLK2_HDR_M/S_DIR	MCLK1_HDR_M/S_DIR	XTI_MCLK2_BRD_EN_DIR	XTI_MCLK1_BRD_EN_DIR
Default Value	0	0	0	0	0	0	0	0

Bits	Name	Description
7	XSP_DSD/SPDIF_DIR	Direction of the XSP_DSD/SPDIF signal 0 Output (Default) 1 Input
6	ASP_PCM/SPDIF_DIR	Direction of the ASP_PCM/SPDIF signal 0 Output (Default) 1 Input
5	XSP_M/S_DIR	Direction of the XSP_M/S signal 0 Output (Default) 1 Input
4	ASP_M/S_DIR	Direction of the ASP_M/S signal 0 Output (Default) 1 Input
3	MCLK2_HDR_M/S_DIR	Direction of the MCLK2_HDR_M/S signal 0 Output (Default) 1 Input
2	MCLK1_HDR_M/S_DIR	Direction of the MCLK1_HDR_M/S signal 0 Output (Default) 1 Input
1	XTI_MCLK2_BRD_EN_DIR	Direction of the XTI_MCLK2_BRD_EN signal 0 Output (Default) 1 Input
0	XTI_MCLK1_BRD_EN_DIR	Direction of the XTI_MCLK1_BRD_EN signal 0 Output (Default) 1 Input

3.1.6 Port Config 3

Address: 0x0E	Default: 0xFC	R/W

Bit Position	7	6	5	4	3	2	1	0
Bitfield Name	Reserved						MCLK_QFN_OE_DIR	MCLK_CSP_OE_DIR
Default Value	1	1	1	x	x	x	0	0

Bits	Name	Description
7:2	Reserved	—
1	MCLK_QFN_OE_DIR	Direction of the MCLK_QFN_OE signal 0 Output (Default) 1 Input
0	MCLK_CSP_OE_DIR	Direction of the MCLK_CSP_OE signal 0 Output (Default) 1 Input

4 CDB-HDR-MEAS High Dynamic Range Measurement Preamplifier

The CDB-HDR-MEAS is an ultralow-noise preamplifier circuit with +13.66 dB of gain. The CDB-HDR-MEAS is designed to be used as a preamplifier to a high-performance audio analyzer to allow measurement of the high dynamic range (DNR) of the CS43131. The CDB-HDR-MEAS preserves the dynamic range of the input signal while amplifying the input signal by +13.66 dB to overcome noise floor limitations of the audio analyzer.

4.1 Powering the CDB-HDR-MEAS

The CDB-HDR-MEAS board requires a triple-output DC power supply capable of providing ±15 V and GND connection at 100 mA, as shown in the figure below. Standard binding posts are provided for convenient connection of +15 V, GND, and -15 V.

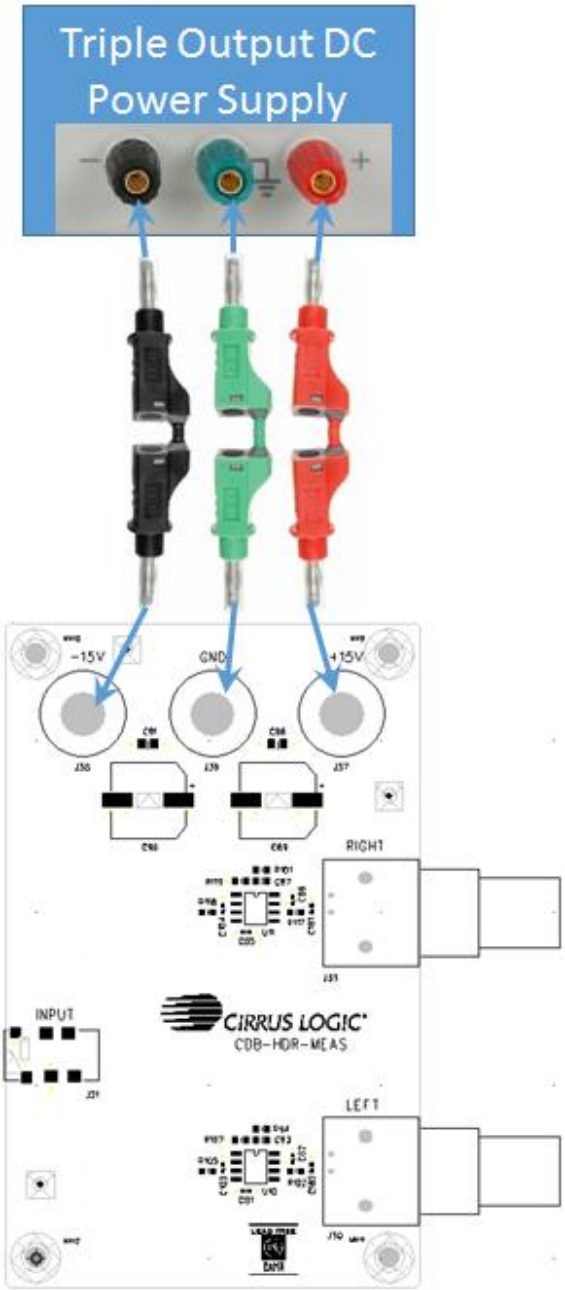

Figure 15 Powering CDB-HDR-MEAS

4.2 How the CDB-HDR-MEAS Works

Since the noise floor of the APx555 is around –124 dB, and the CS43131 has a DNR of 130 dB, the signal needs to be amplified to make it measurable. The following image illustrates this issue. In an ideal situation, the –60 dB signal during DNR tests would yield a total dynamic range of 130 dB. However, due to a higher noise floor of the measurement equipment, the difference results in a measurement error that hampers performance.

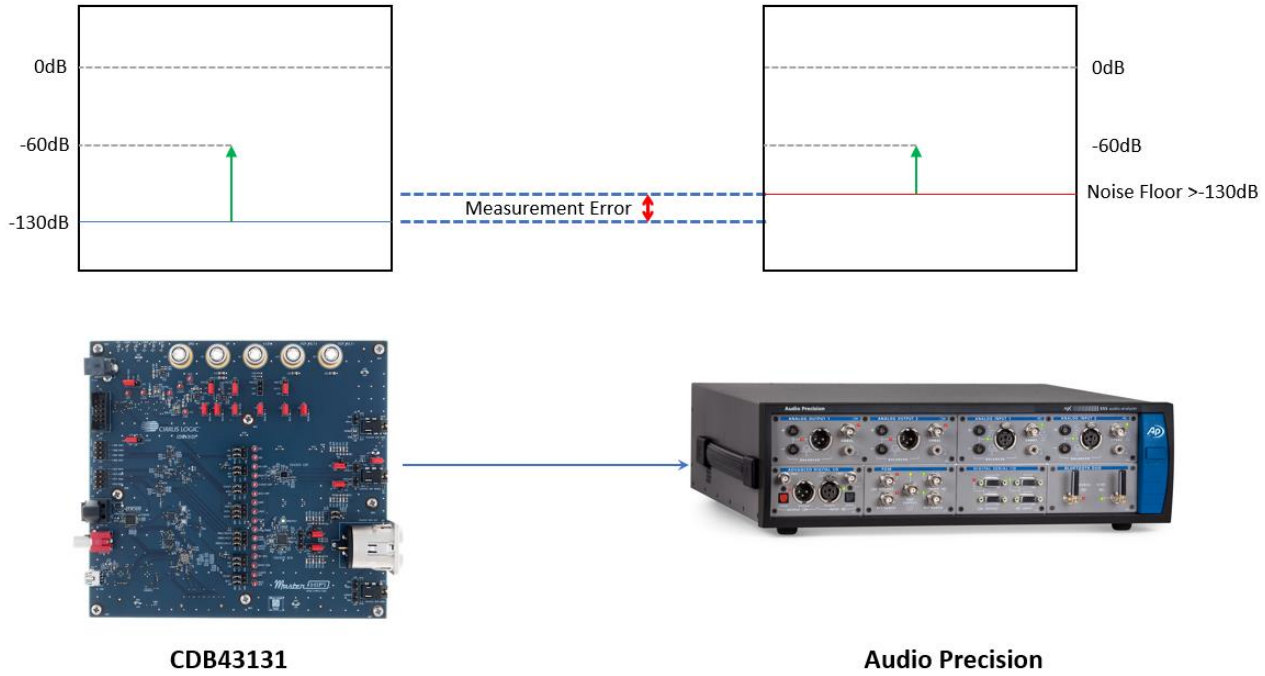

Figure 16 Testing Without CDB-HDR-MEAS

To rectify this issue, the input signal can be amplified (in this case by 13.3 dB). This will also amplify the noise floor; however, since the noise floor is small compared to the signal, the signal will dominate the amplification. In the figure below, the signal and noise floor have been shifted up to be at least on par with the noise floor of the measurement equipment. Now when using the –60 dB signal for the DNR measurement, the full range of 130 dB can be measured.

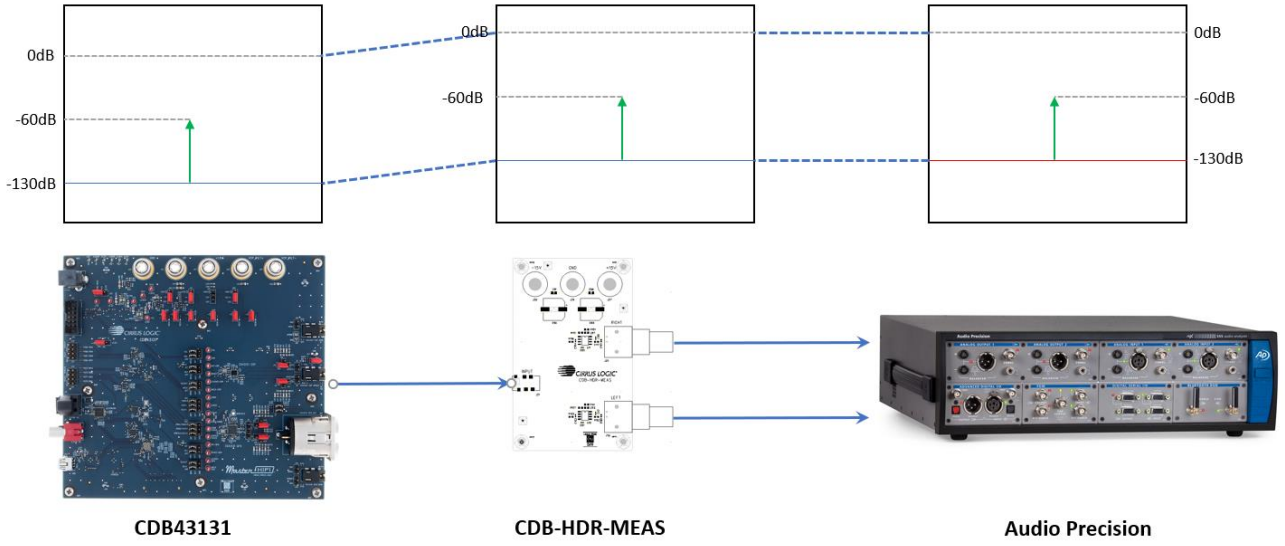

Figure 17 Testing With CDB-HDR-MEAS

5 Testing the CS43131 using WISCE Software

The WISCE™ software interactive setup and configuration environment is an interactive tool for setting up and configuring Cirrus Logic devices and software. The following sections show how to use WISCE software to configure and test CS43131 and using the CDB43131 board and the CDB43131 Board.

5.1 Launching WISCE Software

Click on the Start Button -> All Programs -> Wolfson Evaluation Software and select "WISCE™ V3" to launch the WISCE software.

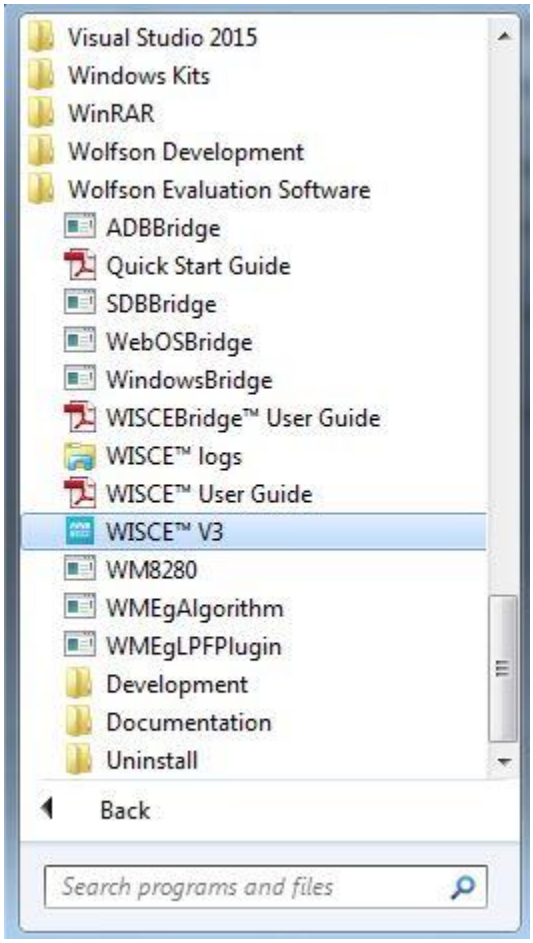

Figure 18 Launch WISCE

The WISCE software is configured, by default, to scan the I²C bus and report the presence of any devices attached to this bus. When the WISCE software is launched, it will report the presence of four unknown devices, one each at address 0x22, 0x44, 0x60 and 0x62 respectively. The device at address 0x22 is the CS8422 Codec, 0x44 is TCA6424, which is an IO Expander. The device at address 0x60 is CS43131 CSP DUT, and the device at address 0x62 is the CS43131 QFN DUT.

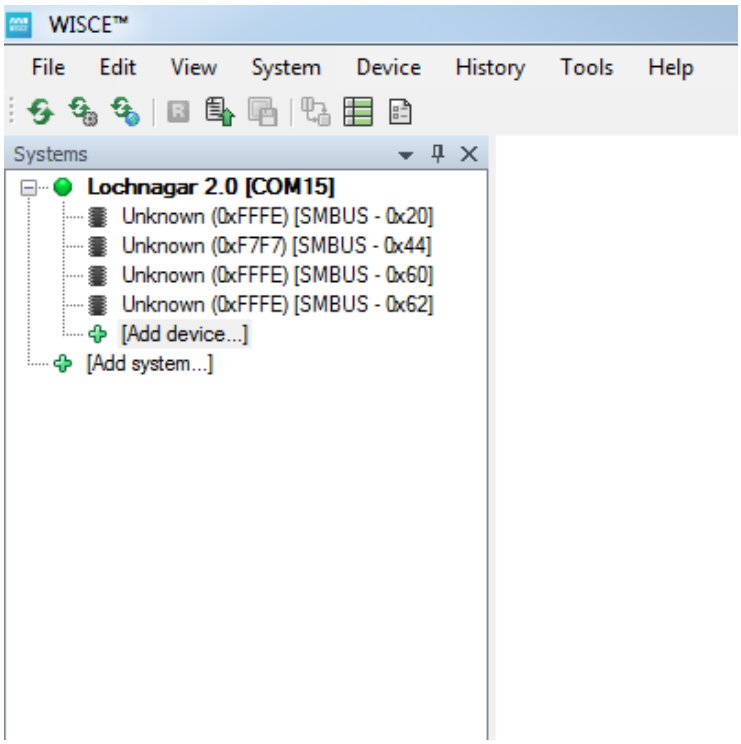

Figure 19 Found Devices

5.2 Loading the CDB43131 board Panel and Register Map

To load the CDB43131 board panel and register map, double click on the Unknown device at address 0x44 to launch "Change Device" pop-up window. Alternatively, the "Change Device" pop-up window can also be launched by right clicking on the Unknown Device and selecting Properties.

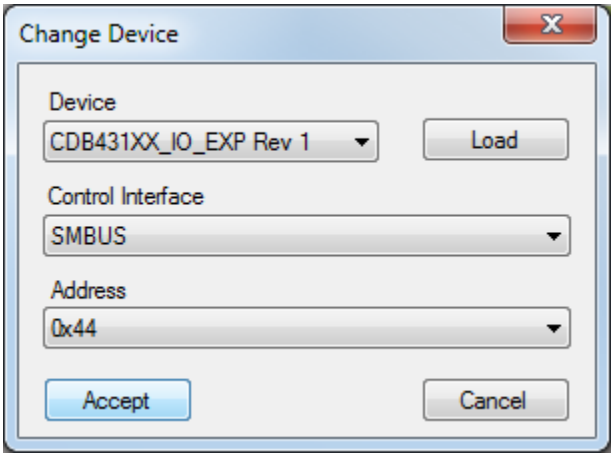

Figure 20 Select TCA6424

Select "CDB431XX_IO_EXP Rev1" from the drop-down menu under Device.

Click "Accept" to load the CDB43131 board Panel and Register Map shown in the following figures.

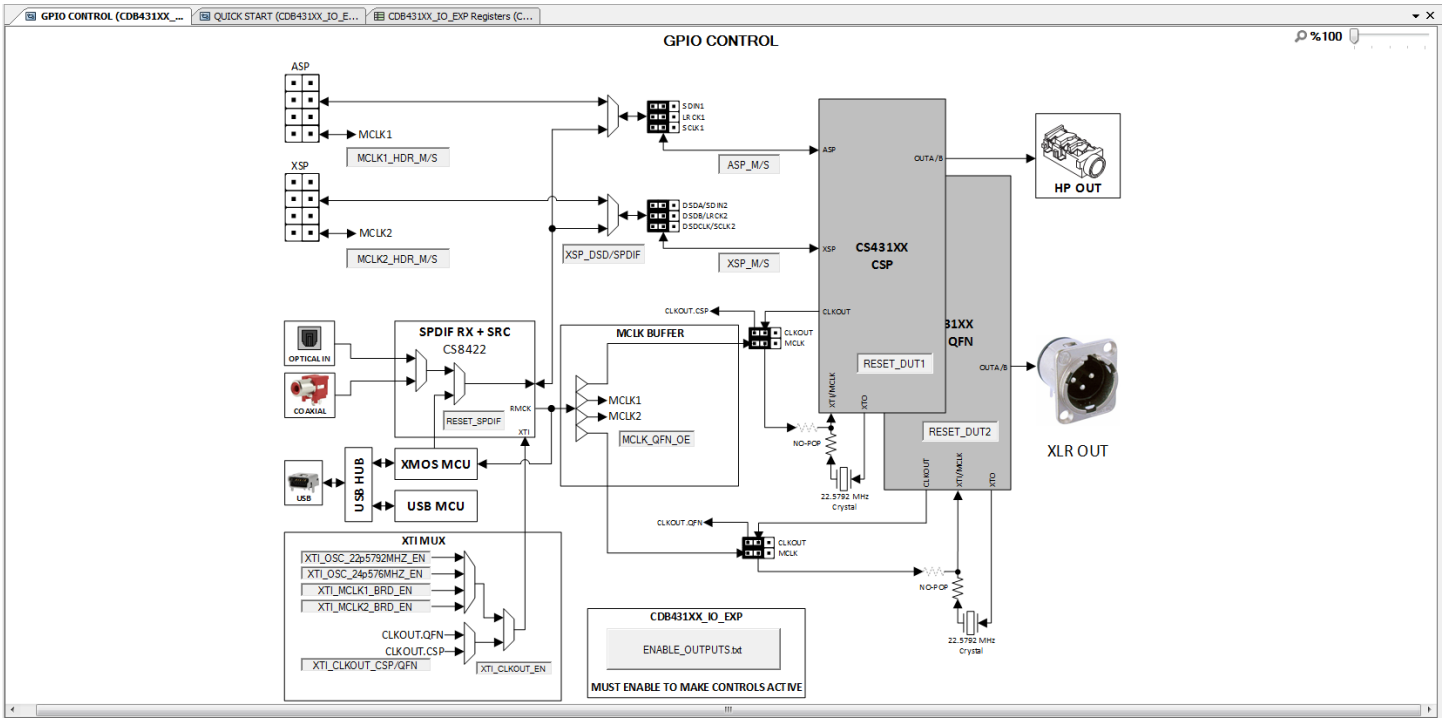

Figure 21 TCA6424 Panel

GPIO CONTROL (CDB431XX_IO... | QUICK START (CDB431XX_IO_E... | CDB431XX_IO_EXP Register...

Address	Register	Read	Write	Value	Bit 7	Bit 6	Bit 5	Bit 4	Bit 3	Bit 2	Bit 1	Bit 0
R02h	Input Port 2	Read		FFh	INT_DUT1 1	INT_DUT2 1	GPO1_SPDIF 1	1	1	1	1	1
R04h	Output Port 0	Read	Write	FFh	XTI_OSC_24p576MHZ_EN 1	XTI_OSC_22p5792MHZ_EN 1	XTI_CLKOUT_EN 1	XTI_CLKOUT_CSP/QFN 1	1	RESET_SPDIF 1	1	1
R05h	Output Port 1	Read	Write	FFh	XSP_DSD/SPDIF 1	ASP_PCM/SPDIF 1	XSP_M/S 1	ASP_M/S 1	MCLK2_HDR_M/S 1	MCLK1_HDR_M/S 1	XTI_MCLK2_BRD_EN 1	XTI_MCLK1_BRD_EN 1
R06h	Output Port 2	Read	Write	FFh	1	1	1	1	1	1	MCLK_QFN_OE 1	MCLK_CSP_OE 1
R0Ch	Configuration Port 0	Read	Write	FFh	XTI_OSC_24_576MHZ_EN_DIR 1	...OSC_22_5792MHZ_EN_DIR 1	XTI_CLKOUT_EN_DIR 1	XTI_CLKOUT_CSP/QFN_DIR 1	1	RESET_SPDIF_DIR 1	RESET_DUT2 1	RESET_DUT1 1
R0Dh	Configuration Port 1	Read	Write	FFh	XSP_DSD/SPDIF_DIR 1	ASP_PCM/SPDIF_DIR 1	XSP_M/S_DIR 1	ASP_M/S_DIR 1	MCLK2_HDR_M/S_DIR 1	MCLK1_HDR_M/S_DIR 1	XTI_MCLK2_BRD_EN_DIR 1	XTI_MCLK1_BRD_EN_DIR 1
R0Eh	Configuration Port 2	Read	Write	FFh	INT_DUT1_DIR 1	INT_DUT2_DIR 1	GPO1_SPDIF_DIR 1	1	1	1	MCLK_QFN_OE_DIR 1	MCLK_CSP_OE_DIR 1

Figure 22 TCA6424 Register Map

5.3 Loading the CS43131 Plugins and Register Map

To load the CS43131 Plugin and Register Map, launch the "Change Device" pop-up window by either double clicking on Unknown Device or right clicking on Unknown Device at address 0x60 and selecting Properties. Select "CS43131 Rev A1" from the Device drop-down menu and click Accept to load the plugin and register map for the CS43131.

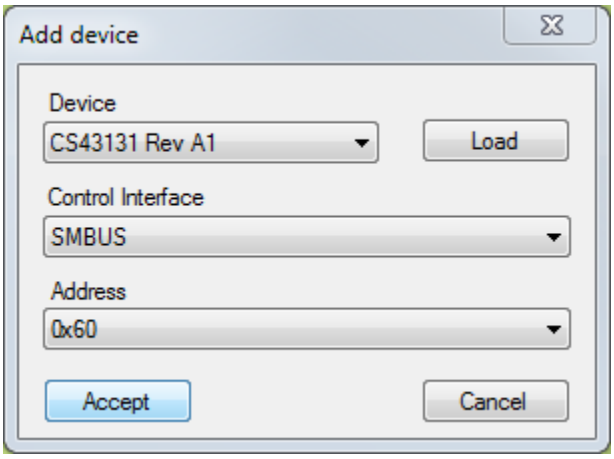

Figure 23 Select CS43131 CSP

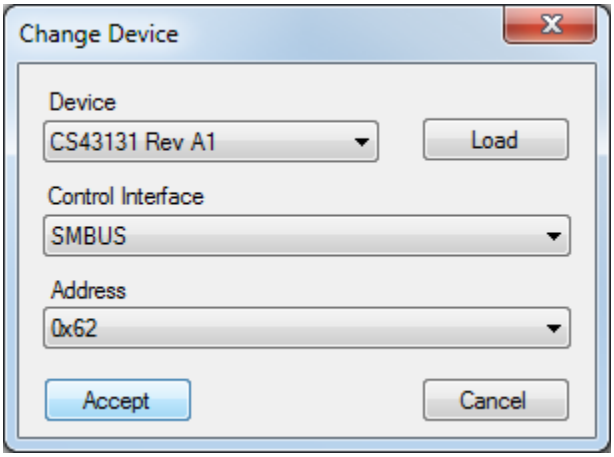

Figure 24 Select CS43131 QFN

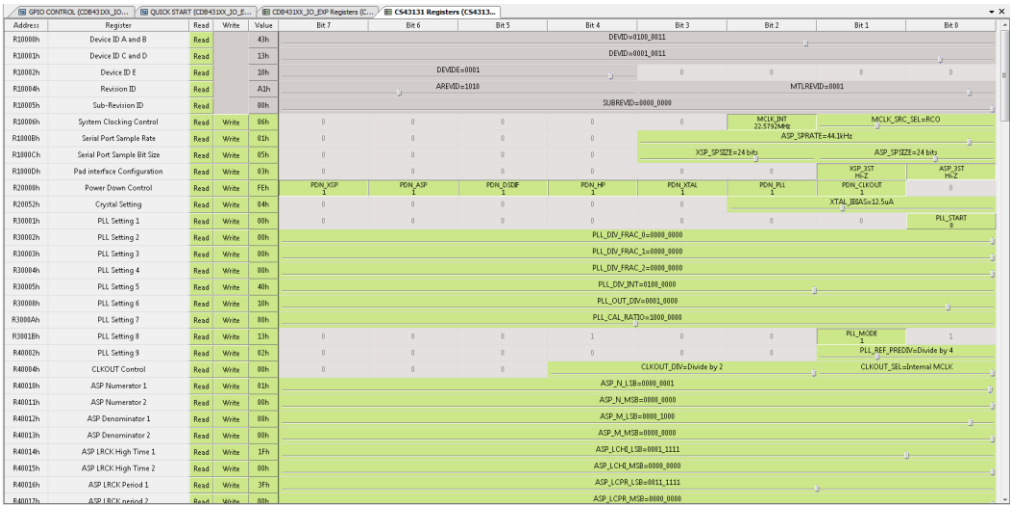

Figure 25 CS43131 Register Map

To view CS43131 plugin, click on Tuning and select "CS43131_Plugin."

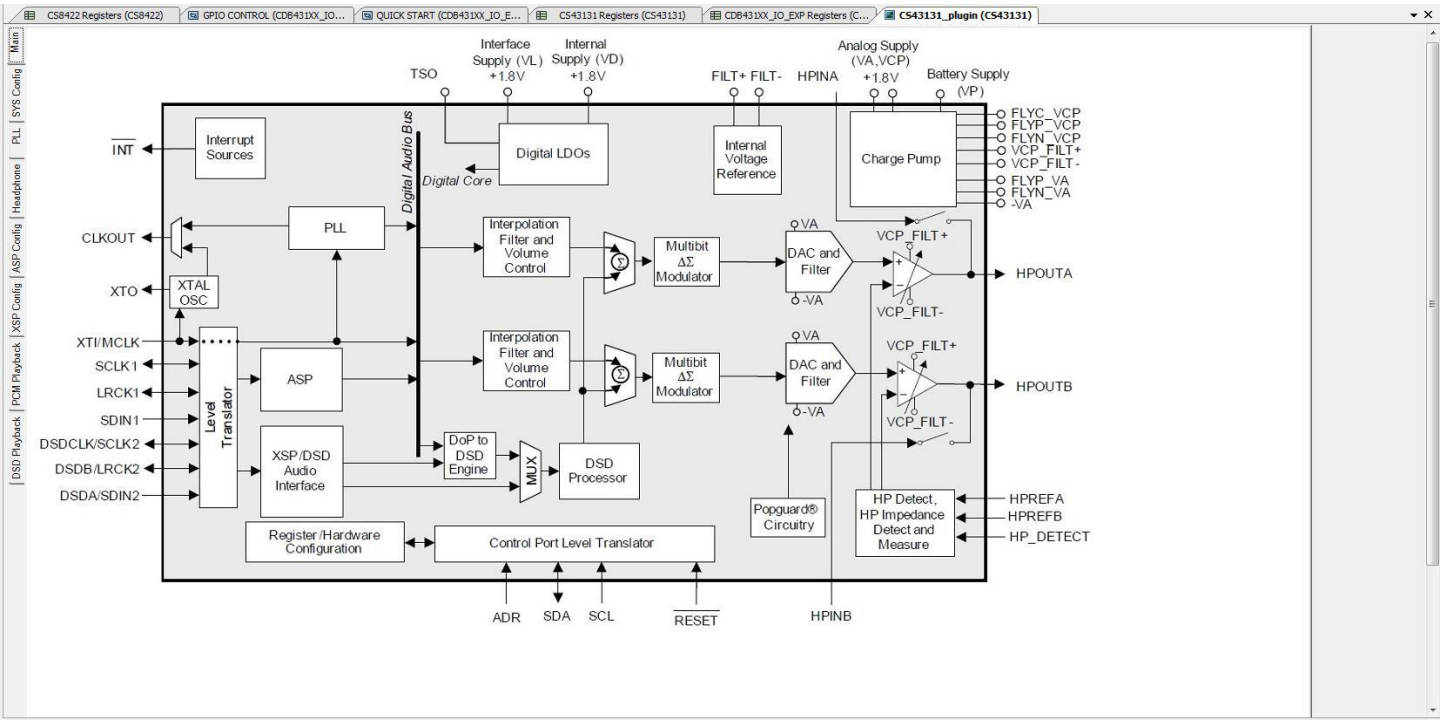

Figure 26 CS43131 Plugin

5.4 Initializing the Devices on the CDB43131 Board

The following steps show how to detect the presence of the CS43131s on the CDB43131 Board.

1. Under the CDB431XX_I2C_GPIP_EXP menu, click on QUICK_START, and click CDB_INIT.txt. This will reset the board into a default mode.

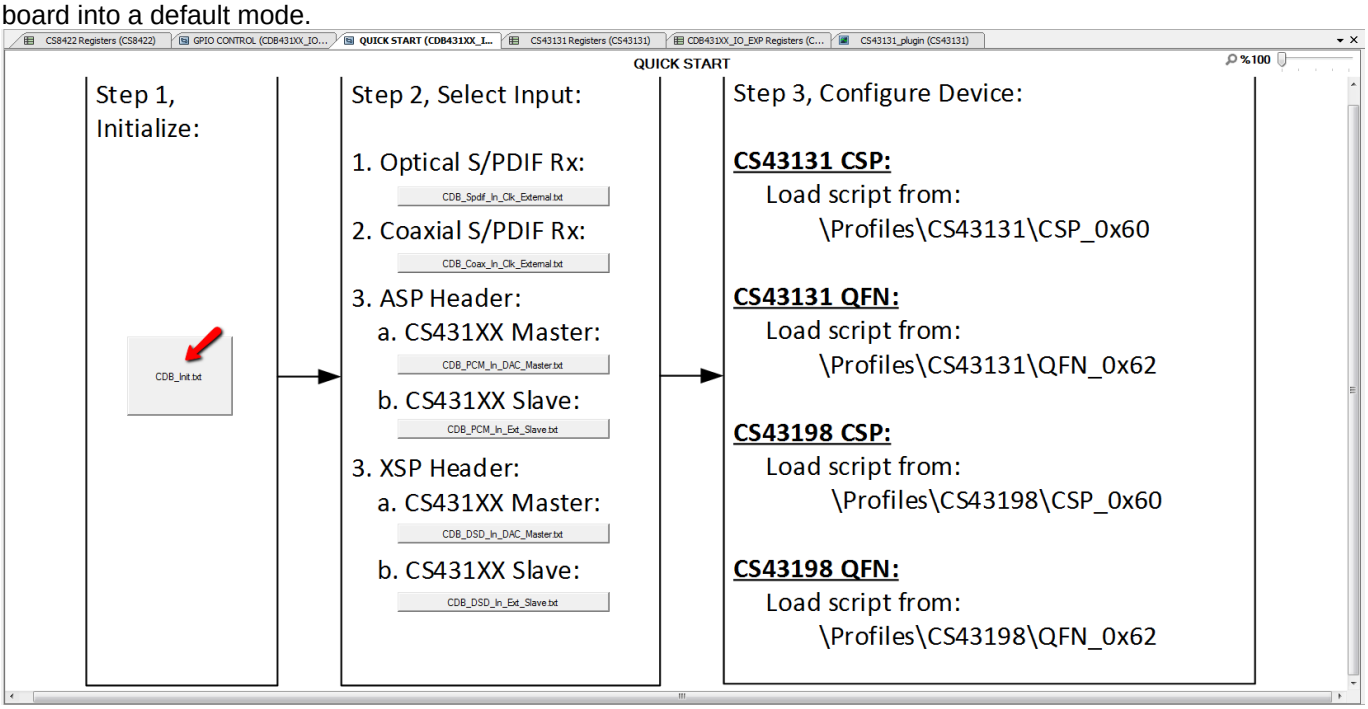

Figure 27 Initialize DACs

5.5 CS43131 Plugin

The CS43131 plugin has multiple tabs. Each tab provides an interface to configure and control specific IP Block(s) in the CS43131. The following sections describe each tab and its function. The user can configure the CS43131 using these tabs. However, it is recommended that the user initially use the profile scripts that are provided with the plugin to configure and control the CS43131 since each field will be preconfigured correctly for the proper mode.

5.5.1 Main Tab

This tab shows the block diagram of the internal architecture of the CS43131.

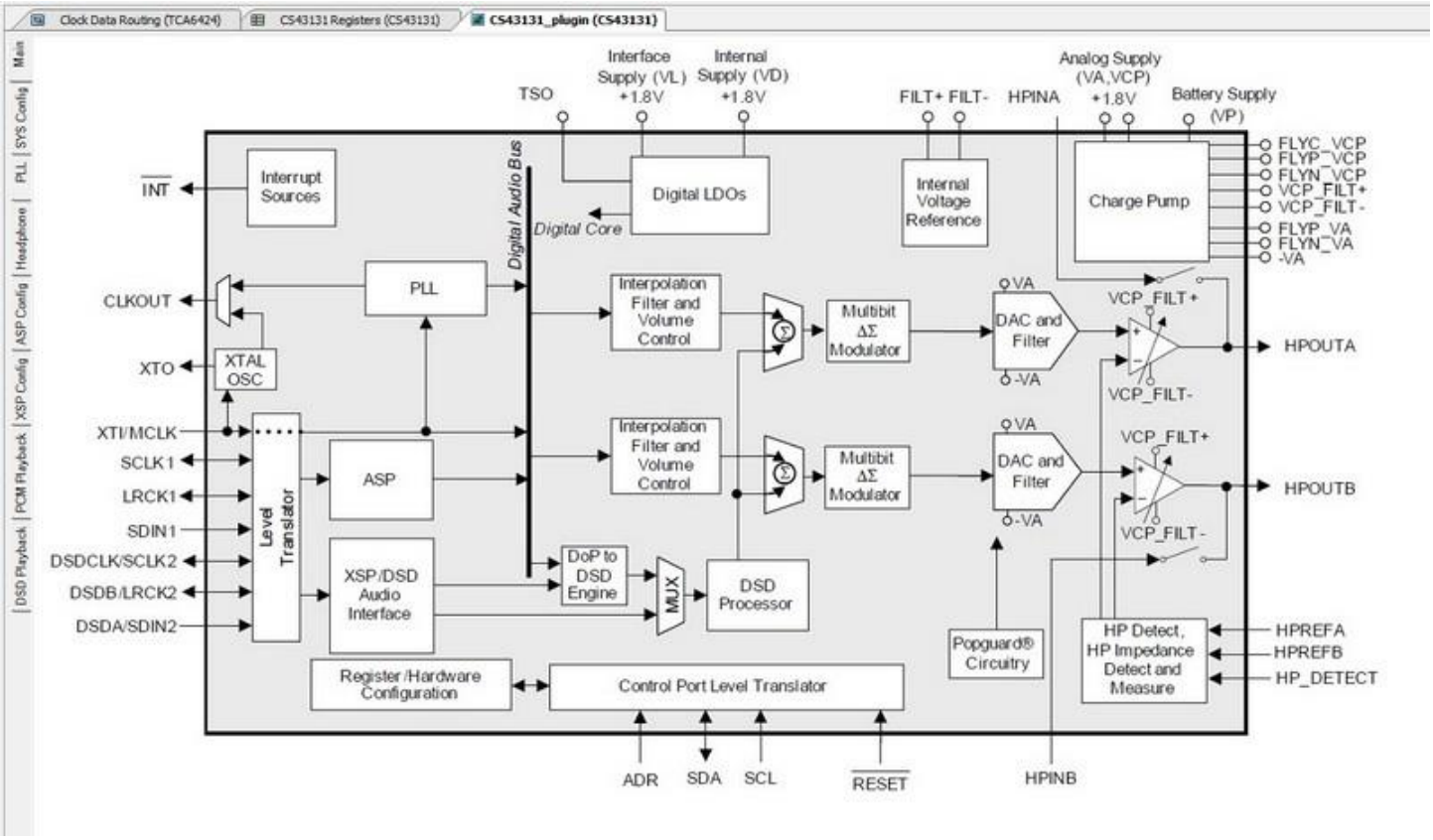

Figure 28 Main tab

5.5.2 Sys_Config Tab

This tab allows user to configure the CS43131 clock input settings. It also allows the user to configure CLKOUT and Class-H amplifier settings.

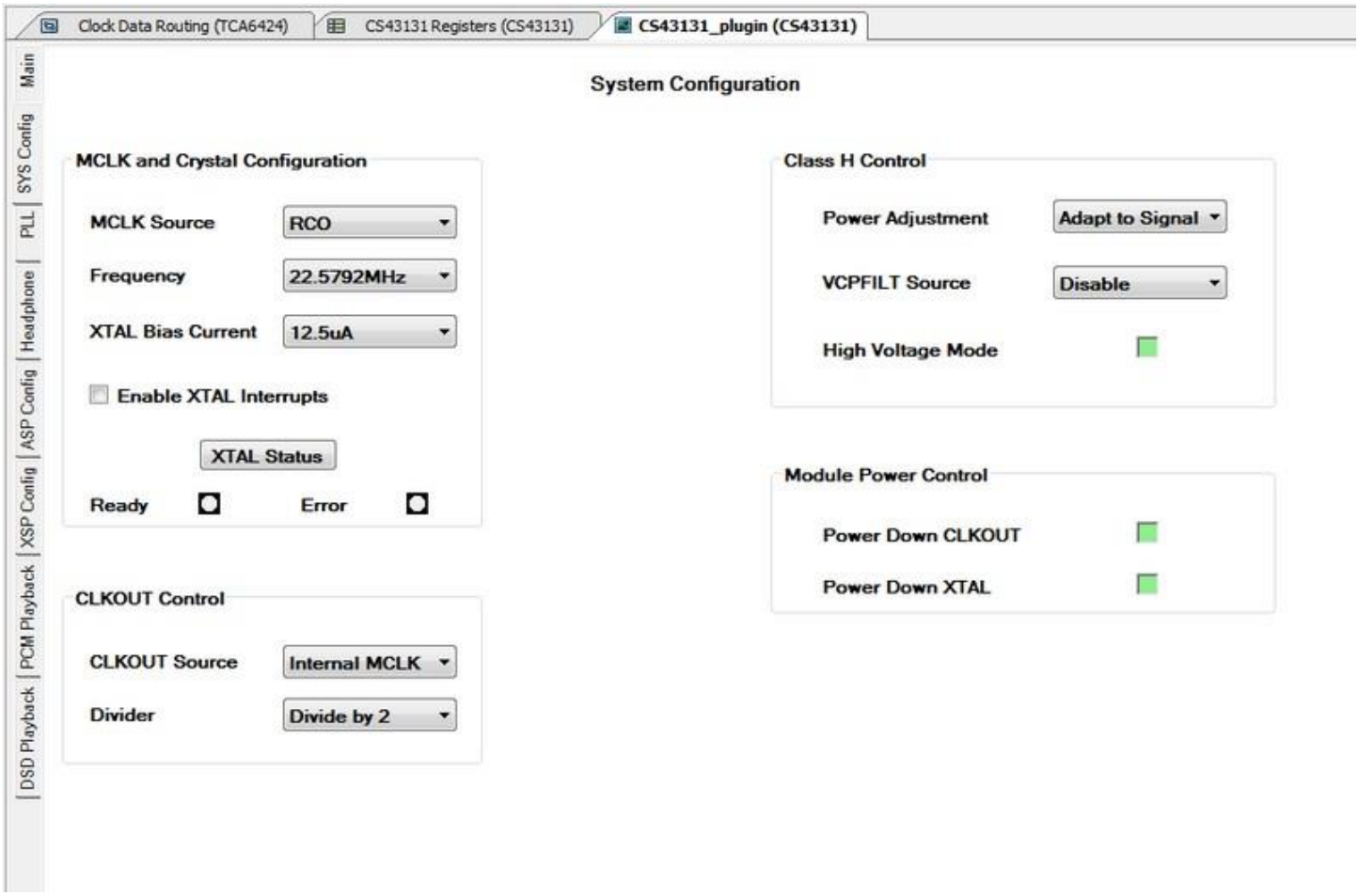

Figure 29 Sys_Config Tab

The example below shows the sequence of steps that should be followed to select On-board Crystal as MCLK source using the Sys_Config tab.

1. XTAL bias is set by default to 12.5 µA.
2. Click on the Enable XTAL Interrupts check box to enable crystal interrupts.
3. Power up the Crystal Interface by clicking on the Power Down XTAL LED (LED color will change to Red).
4. Click on XTAL Status button. If "Ready" LED is lit, the crystal Interface has been configured successfully, and the CS43131 is ready to use XTAL as MCLK source. Go to step 6.
5. If "Error" LED is lit, then the crystal interface is not configured. Power down the board. Check the crystal and the crystal circuit on the board.
6. Select "XTAL" from MCLK Source drop-down menu to select XTAL as MCLK Source.

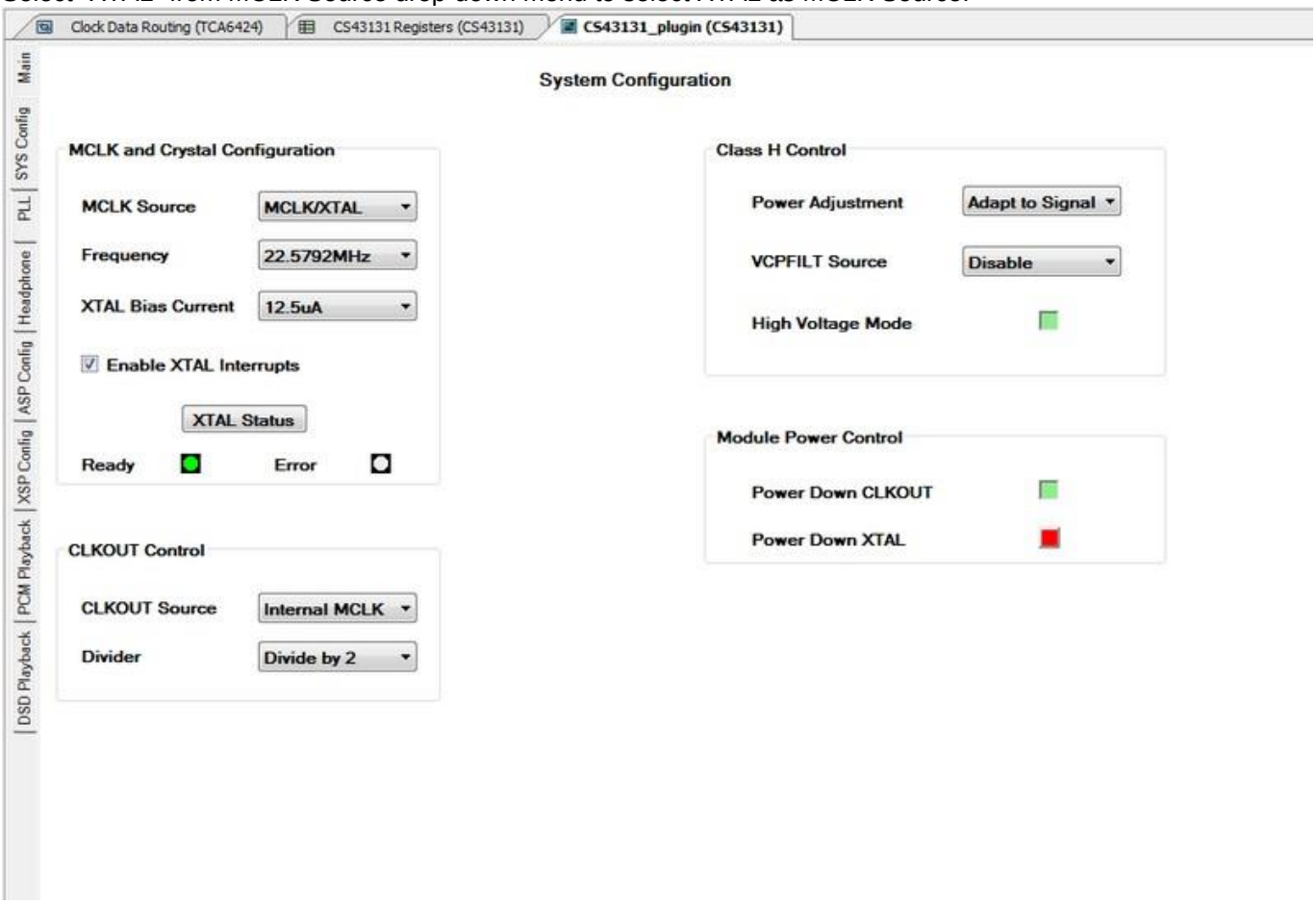

Figure 30 Sys_Config Tab with XTAL as MCLK Source

5.5.3 PLL Tab

This tab allows the user to configure the CS43131 PLL. The PLL can be used as an alternate source for the CS43131 MCLK.

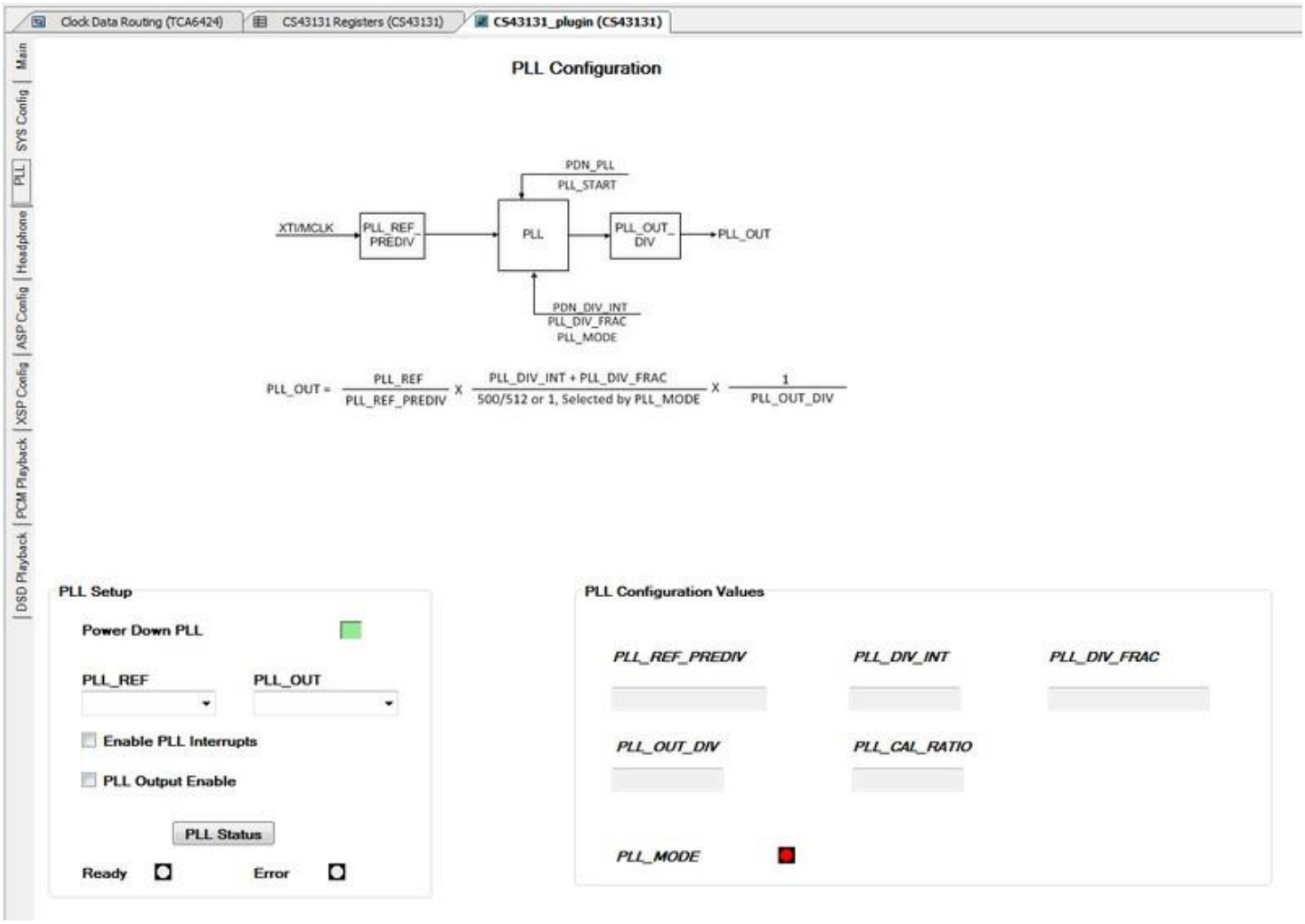

Figure 31 PLL Tab

5.5.4 Headphone Tab

This tab allows the user to perform the following functions:

1. Enable/disable headphone output
2. Enable analog passthrough
3. Enable headphone presence detection
4. Initiate headphone impedance measurement

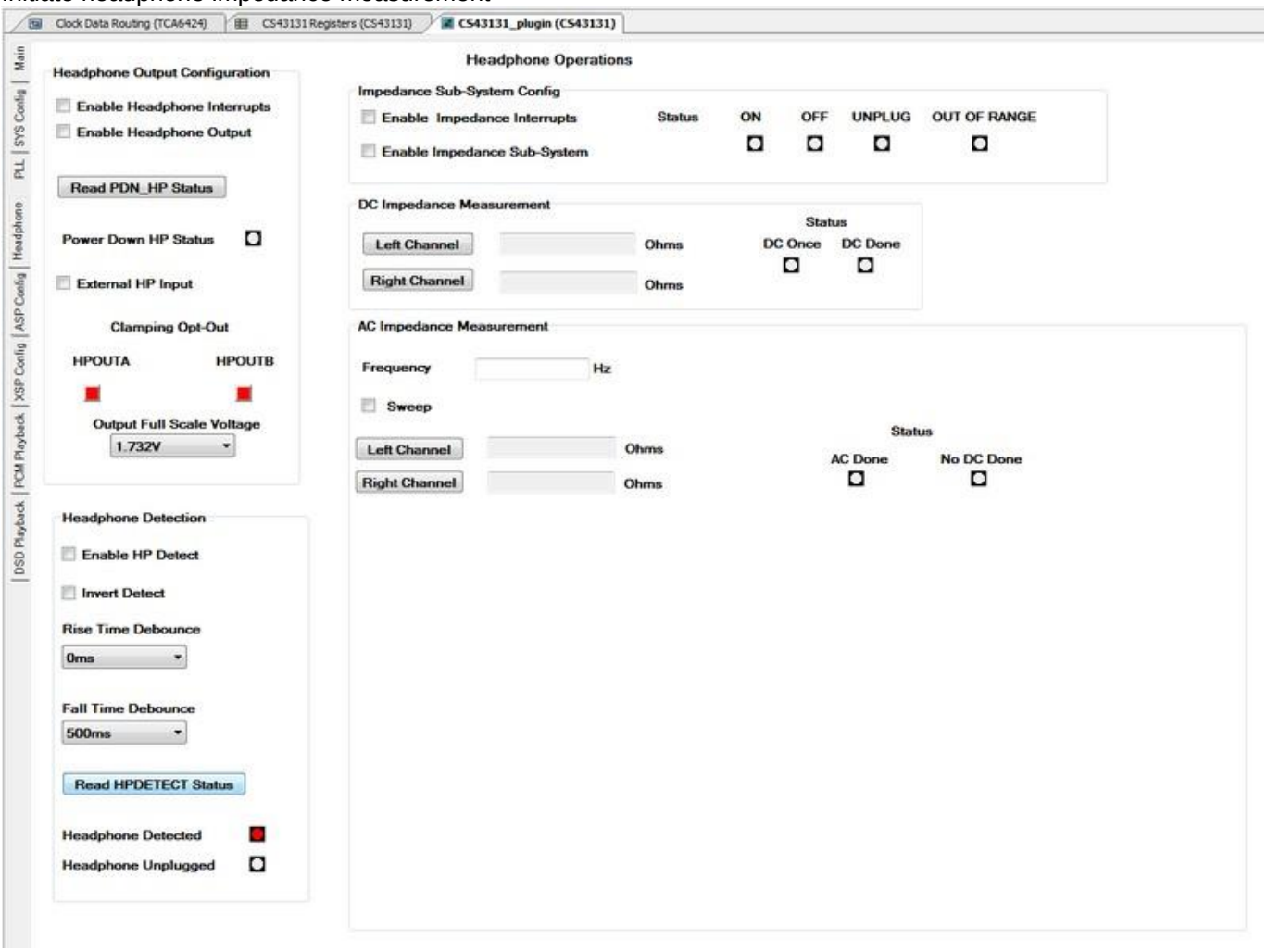

Figure 32 Headphone Tab

5.5.4.1 Enabling Headphone Output

The following steps show how to enable the headphone output using the Headphone tab.

1. Enable headphone interrupts by checking the Enable Headphone Interrupts check box.
2. Configure MCLK source. Configure audio input port.
3. Power up headphone by checking the Enable Headphone Output check box.
4. The headphone output should be powered up.

5.5.4.2 Disabling Headphone Output

The following steps show how to disable the headphone output using the Headphone tab.

1. If the CS43131 just came out of reset, the headphone output is already disabled, so the remaining steps can be skipped.
2. Enable headphone interrupts by checking the Enable Headphone Interrupts check box.
3. Uncheck the Enable Headphone Output check box to power down headphone.
4. Click on Read PDN_HP Status button to read the status of PDN_HP bit.
5. If the PDN_HP bit is set, then the Power Down HP Status LED will turn red to indicate headphone has been powered down.

5.5.4.3 Enabling Analog Audio Passthrough

The following steps show how to enable analog audio passthrough.

1. Connect audio output from a source to the HPIN jack on the CDB43131 board.
2. If the CS43131 is coming out of reset, enable analog audio passthrough by checking the External HP Input check box. Else, skip to step 3.
3. Disable the headphone output if it is not already disabled.
4. Enable analog audio passthrough by checking the External HP Input check box.

5.5.4.4 Headphone Presence Detection

The following steps show how to enable headphone presence detection.

1. Enable headphone interrupts by checking the Enable Headphone Interrupts check box.
2. Enable invert detection (to account for the tip detect pin setup of the headphone jack) by checking the Invert Detect check box.
3. Enable headphone presence detection by checking the Enable HP Detect check box.
4. Click on the Read HPDETECT Status button to read status.
5. If a headphone is plugged into the headphone jack, then the Headphone Detected LED will turn green.

5.5.4.5 Headphone Impedance Measurement

The plugin supports both DC and AC impedance measurement. For AC impedance measurement, it supports both measurement at one frequency or measurement across entire audio band. Any jumpers on headers J28 and J29 should be removed before starting impedance measurement.

5.5.4.5.1 Measuring DC Impedance

The following steps show how to measure DC impedance. A headphone should be connected to headphone jack J1 on the CDB43131 board to do the measurement.

1. Set XTAL as MCLK source.
2. Power down headphone, if not already powered down.
3. Enable impedance interrupts by checking Enable Impedance Interrupts check box.
4. Enable impedance subsystem by checking Enable Impedance Subsystem check box.
5. If the ON Status LED turns green, then the impedance subsystem is enabled. Proceed to step 5. Else, the impedance subsystem did not get enabled. Power cycle the board.
6. Click the Left Channel button to start DC impedance measurement for the left channel.
7. Once the impedance measurement is complete, the measured impedance will be displayed in ohms.
8. Click the Right Channel button if DC impedance measurement of the right channel is desired.

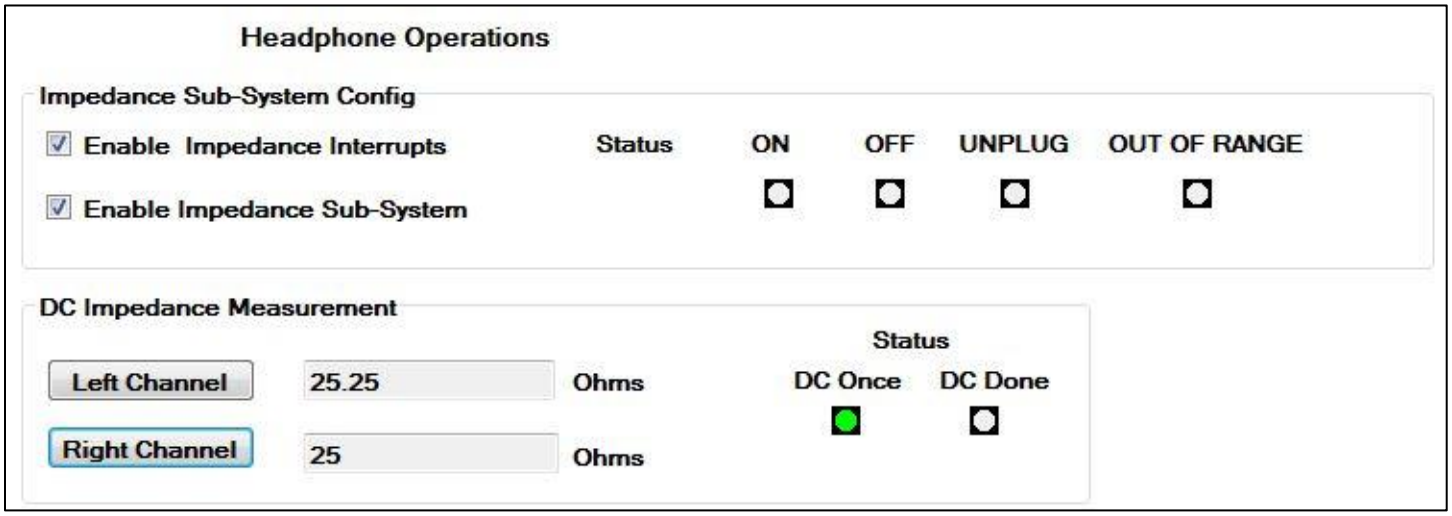

Figure 33 DC Impedance Measurement

5.5.4.5.2 Measuring AC Impedance

The following steps show how to measure AC Impedance. A headphone should be connected to headphone jack J1 on the CDB43131 board to do the measurement. DC impedance should be measured before measuring AC Impedance.

1. Enter the frequency at which the impedance should be measured into Frequency box.
2. Click the Left Channel button to start AC impedance measurement for the left channel.
3. Once the impedance measurement is complete, the measured impedance will be displayed in ohms.
4. Click the Right Channel button if AC impedance measurement of right channel is desired.

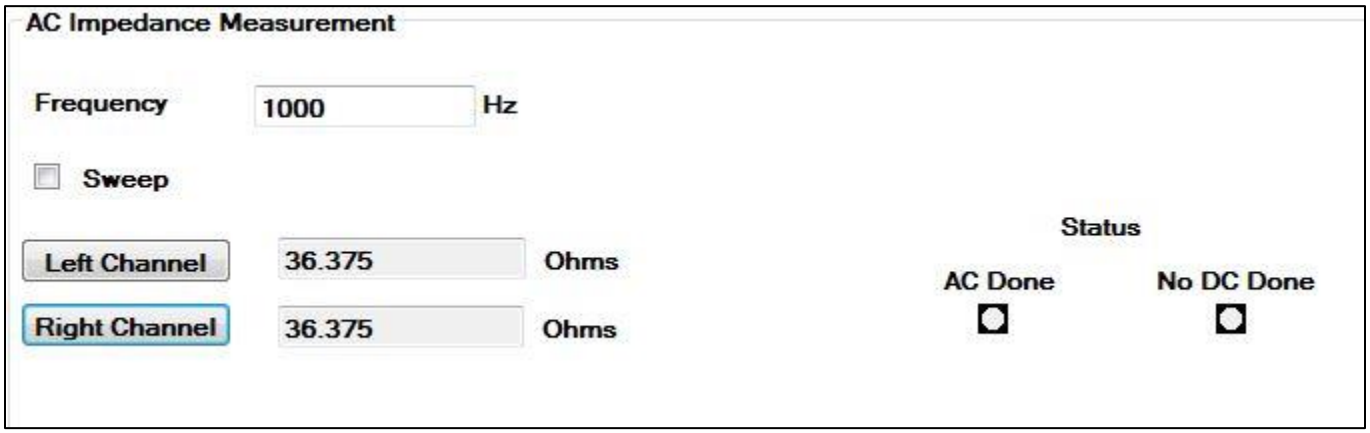

Figure 34 AC Impedance Measurement

5.5.4.5.3 Measuring AC Impedance Across a Range of Frequencies

The following steps show how to measure AC impedance across a range of frequencies. A headphone should be connected to headphone jack J1 on the CDB43131 to do the measurement. DC impedance should be measured before measuring AC impedance. When the "Start" button is clicked, a logarithmic sweep from Start to Stop Frequency, controlled by the value of “# of points", will begin. The measured values will be plotted on the graph in real-time. While the sweep is in progress, the “Start” button will change to “Abort” button. By clicking on the “Abort” button, the user can abort the AC Impedance Sweep process. When measurement is complete, “Abort” will revert back to “Start”

1. Enable frequency sweep by checking Sweep check box. This will load AC frequency sweep controls.
2. Enter the "Start Frequency", "Stop Frequency" and the "# of Points".
3. Click the "Start" button next to "Left Channel" to start AC impedance sweep for left channel and real time plotting.
4. Click the "Start" button next to "Right Channel" to start AC impedance sweep for right channel and real time plotting.
5. To save left channel sweep data, click "Save Left CH Data" button. An explorer dialog will open, and the user can save channel impedance data and the corresponding frequency as a .CSV file at desired location
6. To save right channel sweep data, click "Save Right CH Data" button. An explorer dialog will open, and the user can save channel impedance data and the corresponding frequency as a .CSV file at desired location
7. Save the graph as a .PNG file by clicking on the Save Image button. An explorer dialog box will open to allow the user to save the image at the desired location.

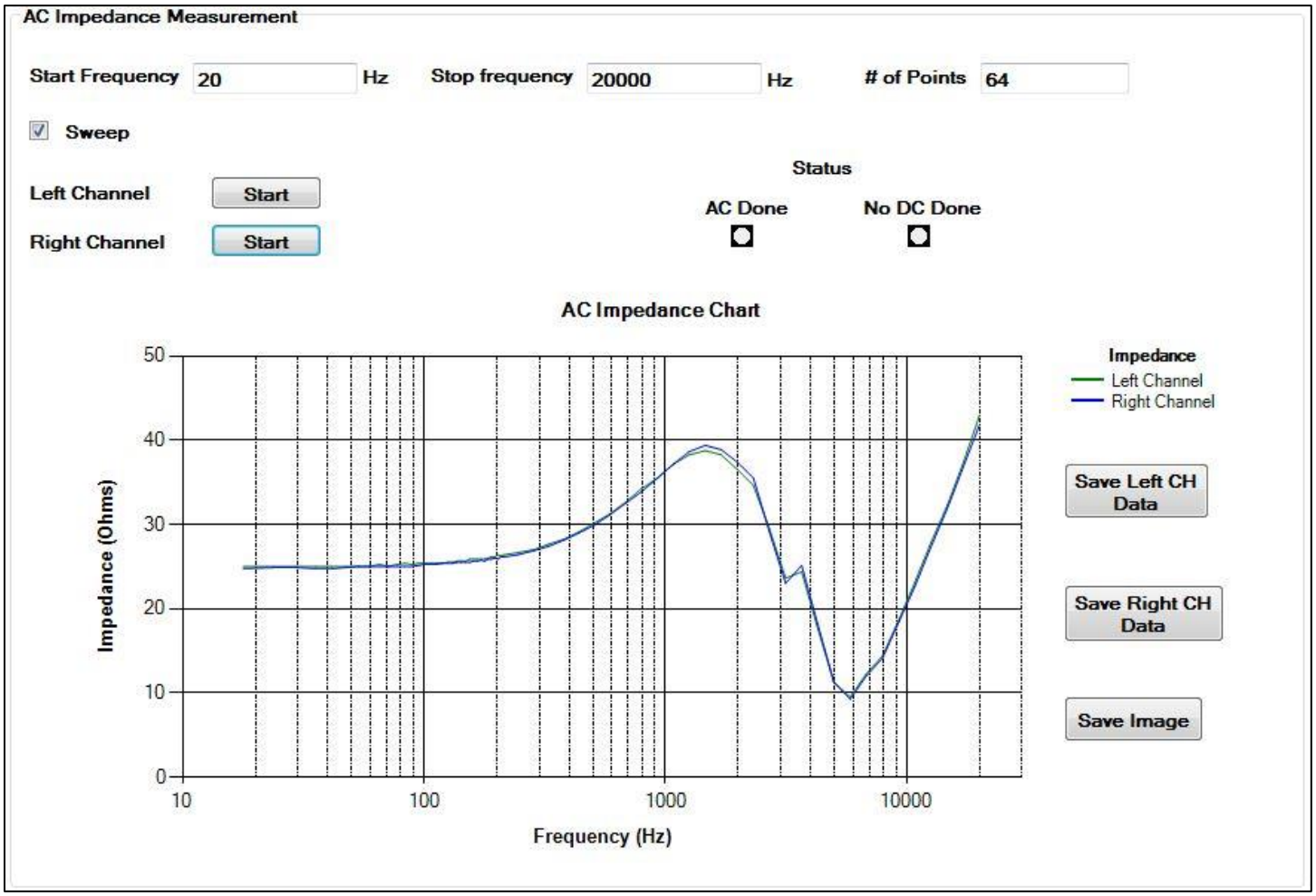

Figure 35 AC Impedance Sweep for Shure SE535 Headphone

5.5.5 ASP Config Tab

This tab allows the user to configure the ASP port. The following figure shows ASP Config tab contents when ASP is configured to operate in Slave mode.

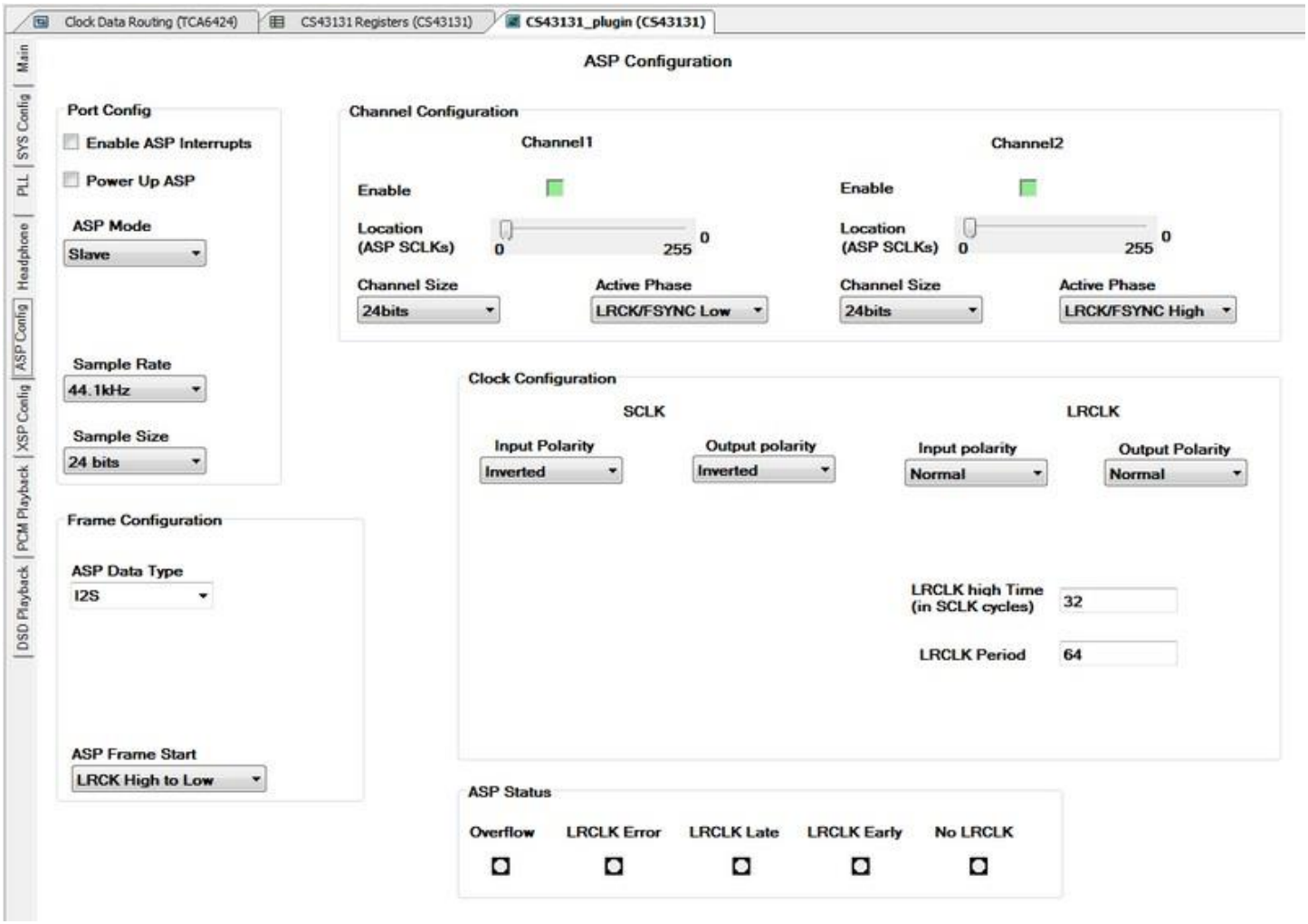

Figure 36 ASP Config Tab

The following figure shows the contents of ASP Config tab when ASP is configured to operate in Master mode.

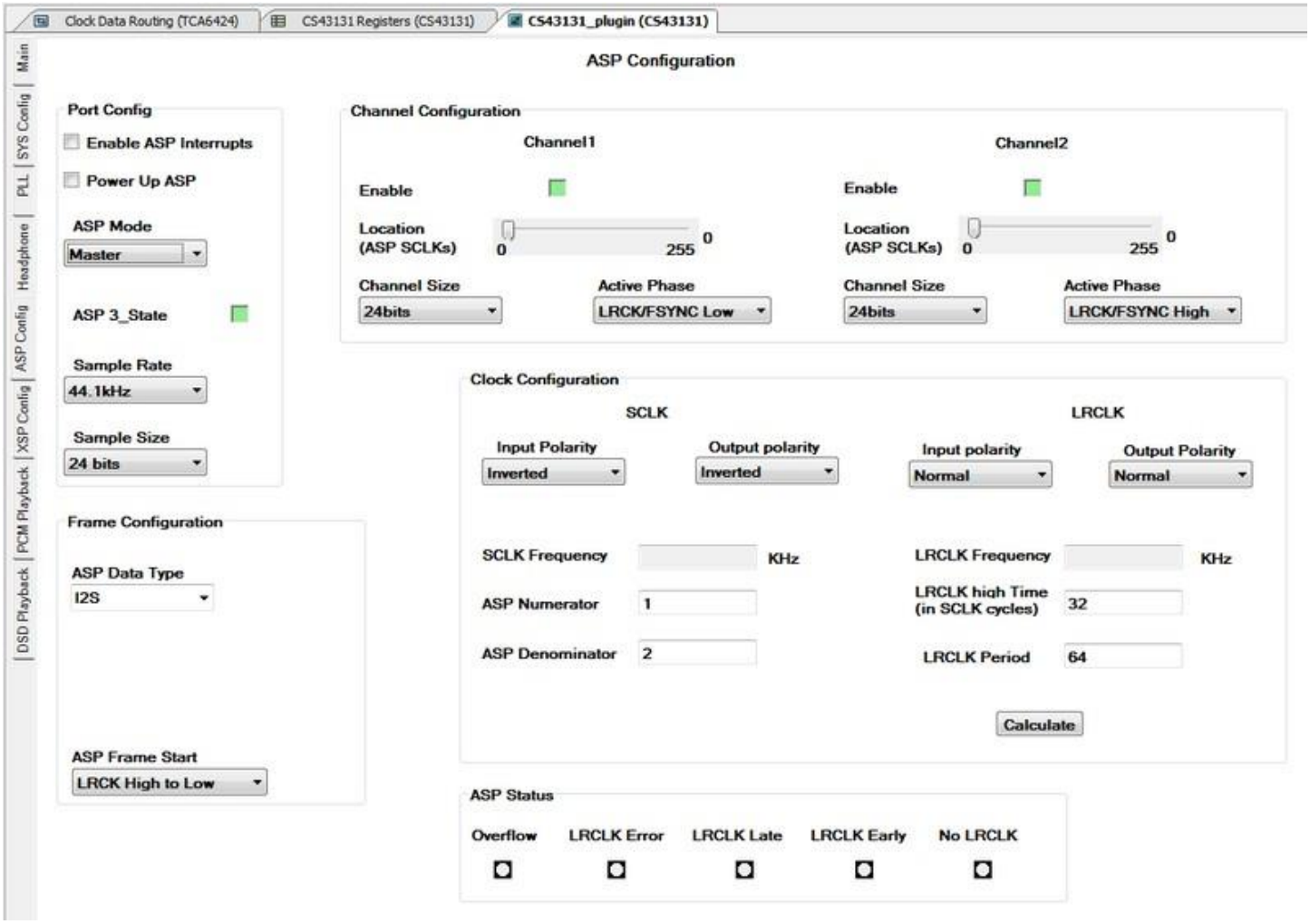

Figure 37 ASP Config Tab in Master Mode

Click the Calculate button to determine the frequencies of the SCLK and LRCLK signals. When this button is clicked, the SCLK and LRCLK values will be calculated based on the selected frequency of Internal MCLK (MCLK_INT) and the values in ASP Numerator, ASP Denominator, LRCLK high Time and LRCLK Period text boxes. The value in the LRCLK Frequency text box will be used to set the new sample rate (if it is not already set by user) when the ASP is powered up.

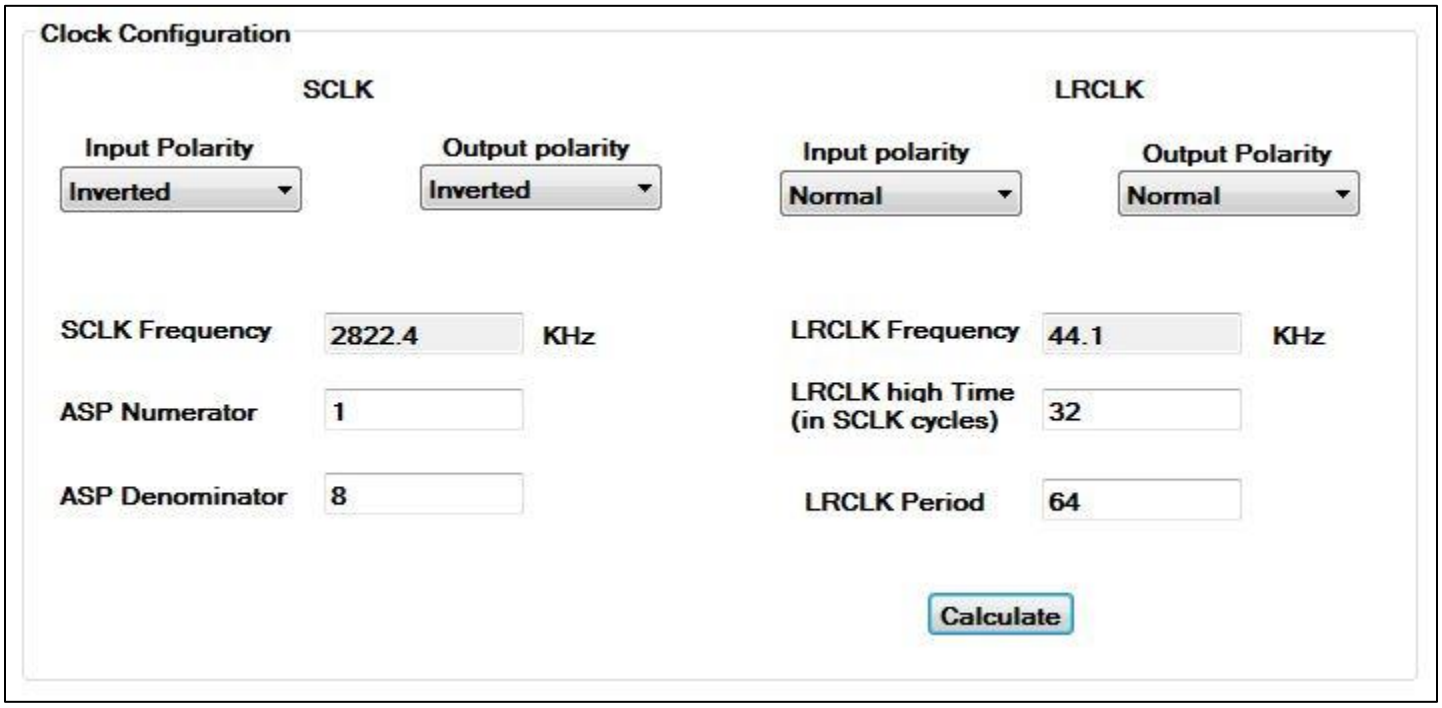

Figure 38 Calculating ASP Clock Frequencies

It is recommended to use a profile script to configure this port since each field will be preconfigured correctly for the proper mode.

5.5.6 XSP Config Tab

This tab allows the user to configure the XSP port. The following figure shows XSP Config tab contents when XSP is configured to operate in Slave mode.

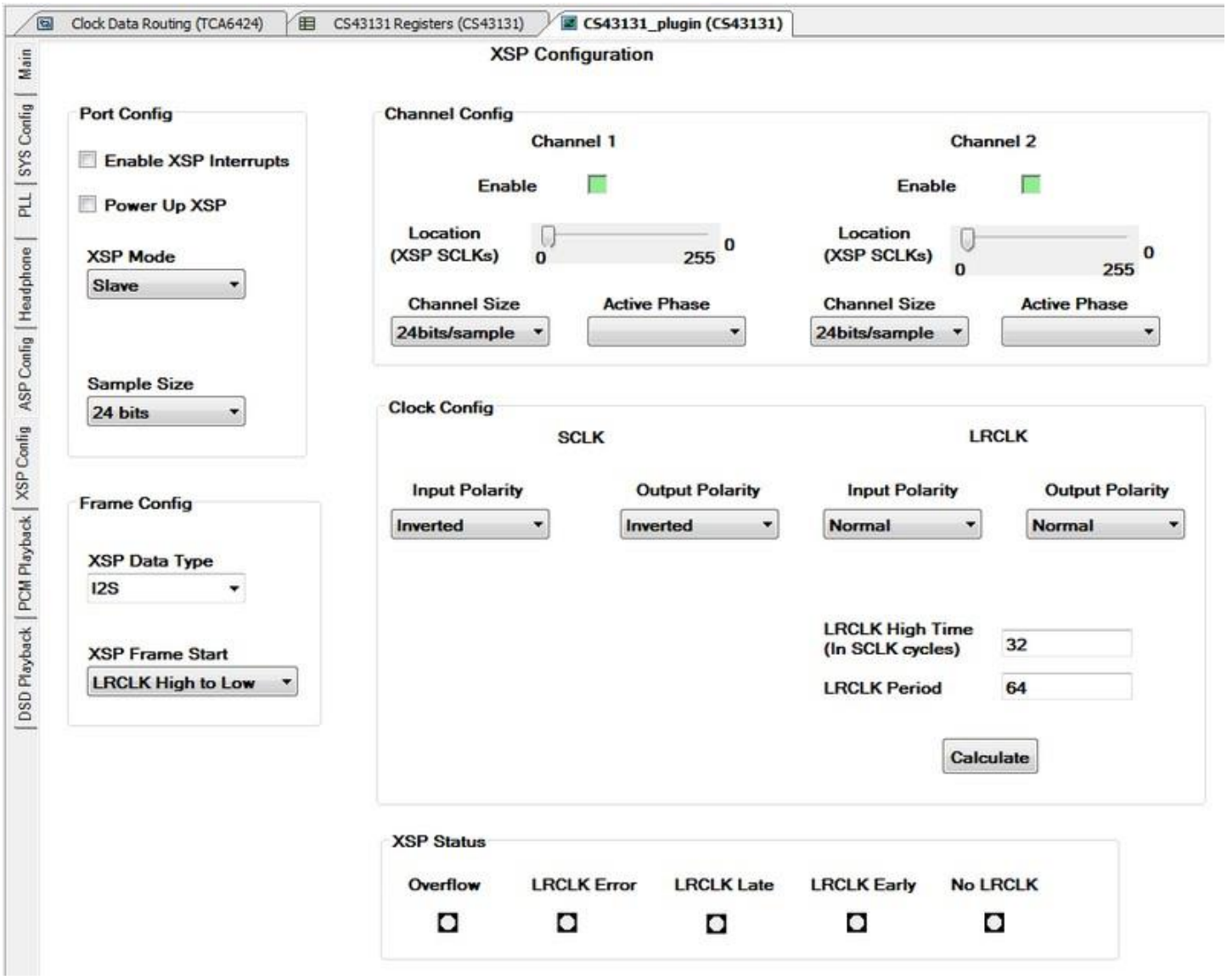

Figure 39 XSP Config Tab in Slave Mode

The following figure shows the contents of XSP Config tab when XSP is configured to operate in Master mode.

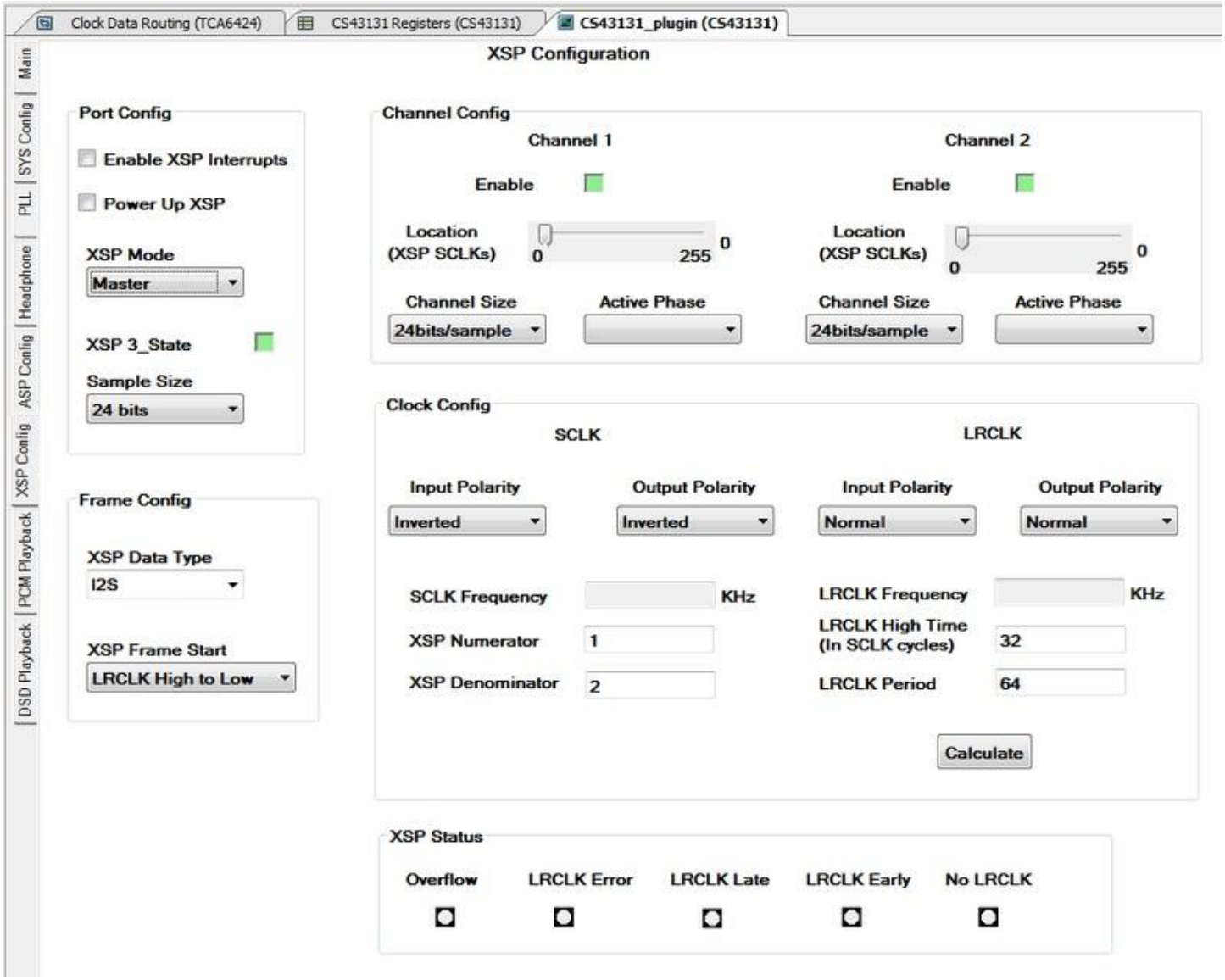

Figure 40 XSP Config Tab in Master mode

Click the Calculate button to determine the frequencies of the SCLK and LRCLK signals. When this button is clicked, the SCLK and LRCLK values will be calculated based on the selected frequency of Internal MCLK (MCLK_INT) and the values in XSP Numerator, XSP Denominator, LRCLK high Time and LRCLK Period text boxes. The value in the LRCLK Frequency text box will be used to set the new sample rate (if it is not already set by user) when the XSP is powered up.

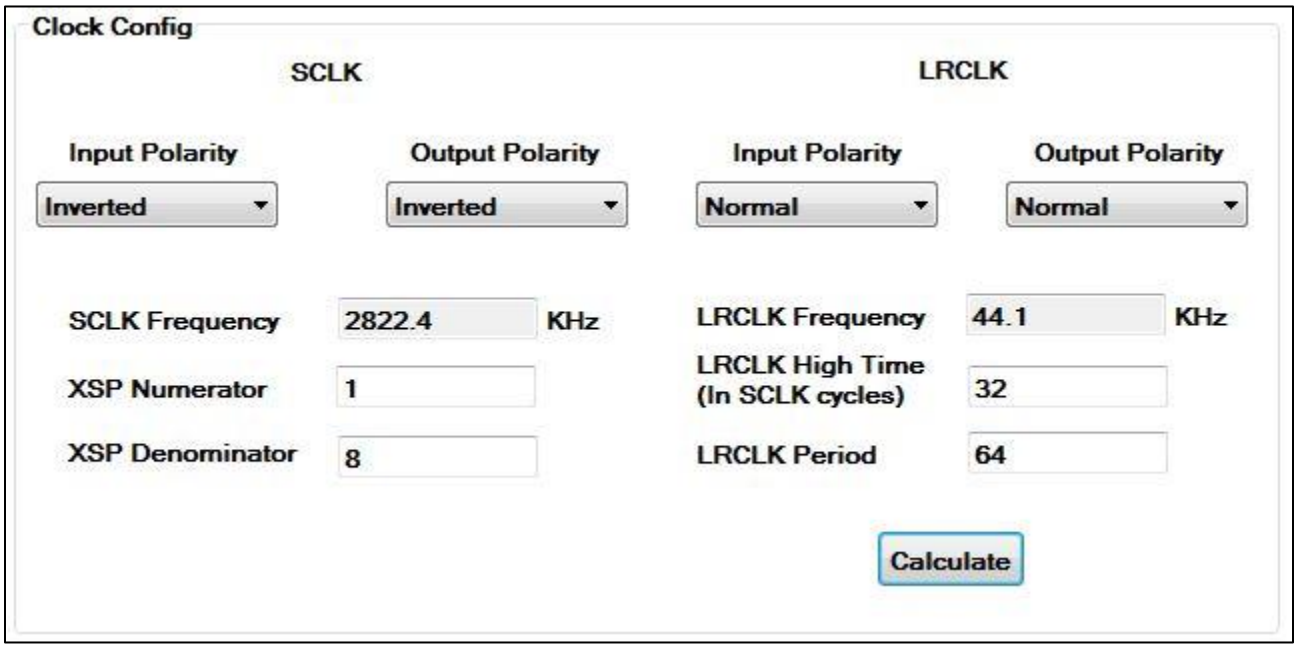

Figure 41 Calculating XSP Clock Frequencies

It is recommended to use a profile script to configure this port since each field will be preconfigured correctly for the proper mode.

5.5.7 PCM Playback Tab

This tab allows the user to configure PCM playback path. This tab allows the user to change PCM filter dynamically during playback. The impulse and magnitude responses of the selected filter are displayed. It is recommended to use a profile script to configure this part since each field will be preconfigured correctly for the proper mode.

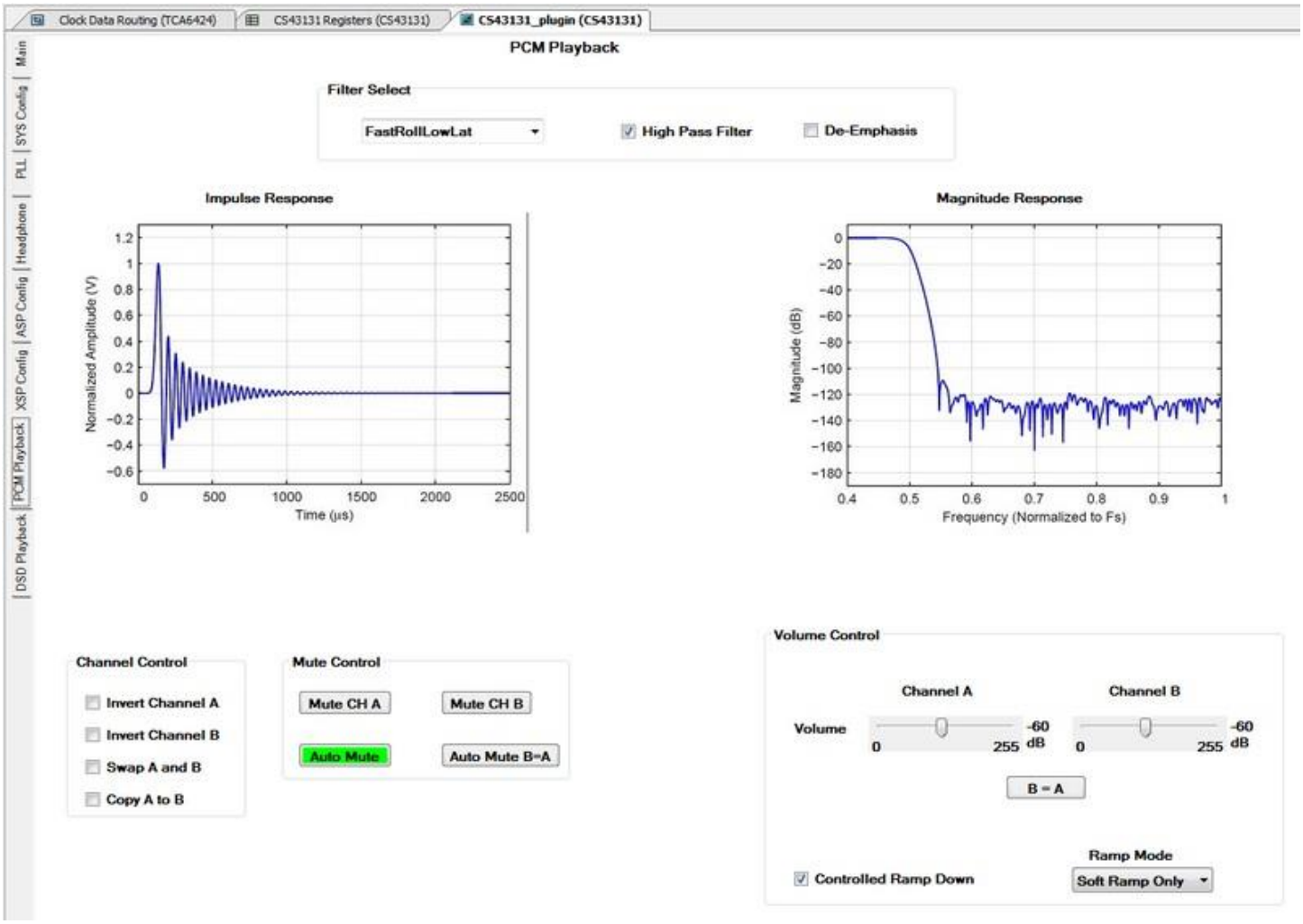

Figure 42 PCM Playback Tab

5.5.8 DSD Playback Tab

This tab allows the user to configure the DSD/DoP playback path. It is recommended to use a profile script to configure this port.

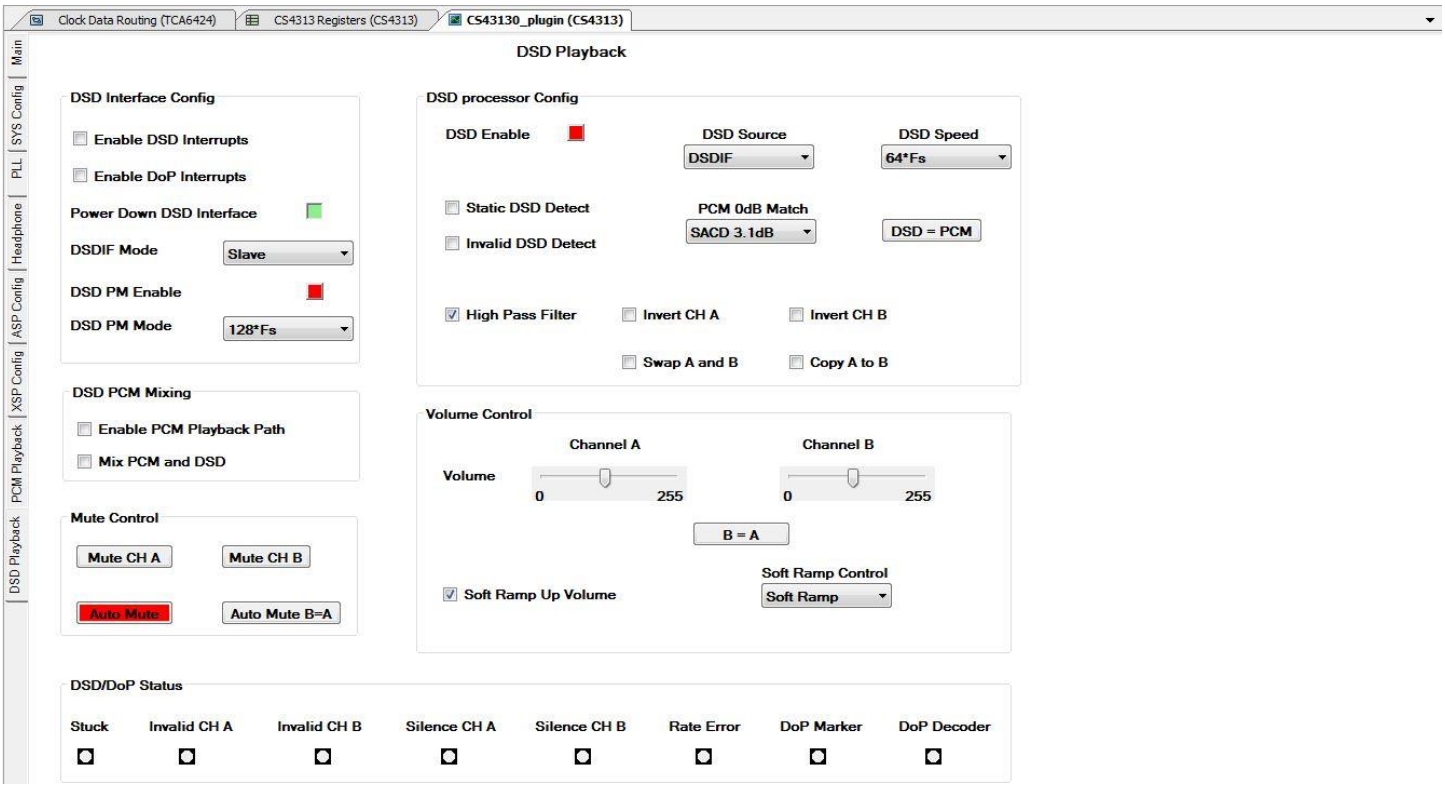

Figure 43 DSD Playback Tab

6 Testing Various Use cases

Profile scripts are provided along with the plugin to allow the user to test various common use cases. The profile scripts for CS43131 can be found in {WISCE_INSTALL_FOLDER}/Profiles/CS43131. If needed, users can create their own profile scripts to suit their requirements. Individual scripts are provided for each combination of Sample Rate and Output Voltage level for both PCM and DSD modes. The following table shows the list of supported use cases along with corresponding profile scripts.

Table 9 Profile Scripts

Use Case	DAC mode	Scripts (for CS43131)	Audio Input Source
PCM Playback	Master	CDB_PCM_In_DAC_Master, ASP_Master_PCM_Playback_xxx_yyy [1] *xxx* is the sample rate *yyy* is the output voltage level	PCM through ASP header (J25)
PCM Playback	Slave	CDB_Spdif_In_Clk_External, XTAL_In_ASP_Slave_PCM_Playback_*xxx_yyy* [2] *xxx* is the sample rate *yyy* is the output voltage level	S/PDIF (J10)
		CDB_Coax_In_Clk_External, XTAL_In_ASP_Slave_PCM_Playback_*xxx_yyy* [2] *xxx* is the sample rate *yyy* is the output voltage level	Coaxial (J11)
		CDB_PCM_In_Ext_Slave XTAL_In_ASP_Slave_PCM_Playback_*xxx_yyy* [2] *xxx* is the sample rate *yyy* is the output voltage level	PCM through ASP header (J25)
DSD Playback	Slave	CDB_DSD_In_Ext_Slave, Slave_DSD_Playback_*xxx_yyy* [3] *xxx* is the DSD Speed *yyy* is the output voltage level	DSD through XSP header (J26)
DoP Playback (64fs Mode)	Slave	CDB_PCM_In_Ext_Slave, DoP_DSD64_playback_XTAL_Slave	PCM through ASP header (J25)
		CDB_Spdif_In_Clk_External, DoP_DSD64_playback_XTAL_Slave	S/PDIF (J10)
		CDB_Coax_In_Clk_External, DoP_DSD64_playback_XTAL_Slave	Coaxial (J11)
DoP Playback (128fs Mode)	Slave	CDB_PCM_In_Ext_Slave, DoP_DSD128_playback_XTAL_Slave	PCM through ASP header (J25)
Headphone Detection	—	Headphone_Detection	—
Analog Passthrough	—	Analog_Passthrough	CS43131 CSP HPIN (J16)
Switch from Analog Passthrough to PCM Playback	Slave	CDB_PCM_In_Ext_Slave, Switch_Analog_to_PCM_asp_slave	PCM through ASP header (J25)
Switch from PCM Playback to Analog Passthrough	Slave	CDB_PCM_In_Ext_Slave, Switch_PCM_to_Analog	PCM through ASP header (J25)
Switch MCLK frequency	—	Switch_MCLK_Frequency	—

Notes:

1. For example, if the desired sample rate is 48 kHz and desired output voltage is 1 V, then load the ASP_Master_PCM_Playback_48K_1V0 script.
2. For example, if the incoming sample rate is 48 kHz and desired output voltage is 1 V, then load the XTAL_In_ASP_Slave_PCM_Playback_48K_1V0 script.
3. For example, if playing back DSD stream at 64 Fs and the desired output voltage is 1.7 V, then load the Slave_DSD_Playback_64fs_1v7 script.

Table 10 Additional Profile Scripts for CS43131

Script	Function
Power_Up_HP	Power up HP and ASP (for PCM/DoP playback)
Power_Up_HP_DSD_mode	Power up HP (for DSD playback)
Power_Down_HP_PCM_mode	Power down ASP and HP
Power_Down_HP_DSD_mode	Power down HP

6.1 Data Flow for Various Use Cases

The following sections depict the flow of data, in red, for various common use cases.

6.1.1 PCM Playback

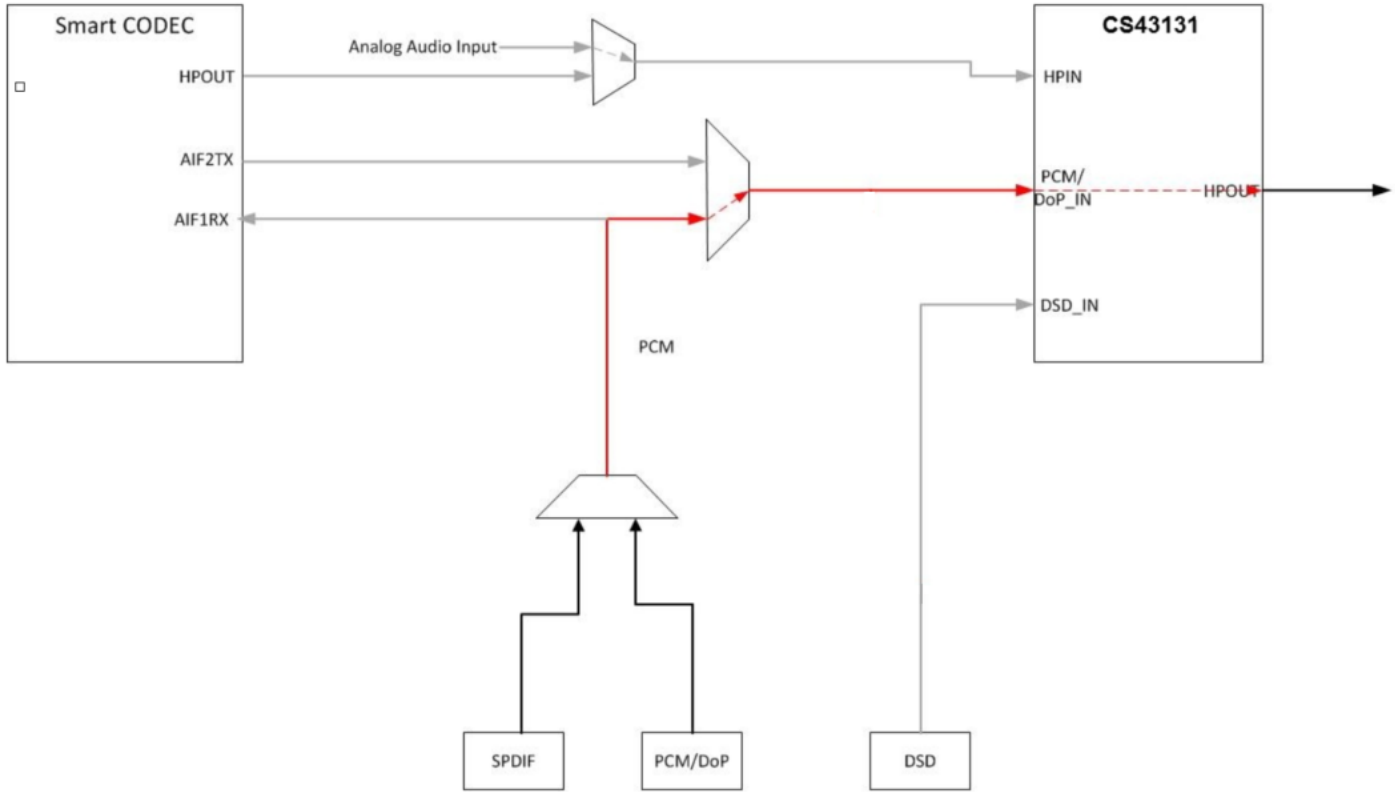

Figure 44 PCM Playback Data Flow

6.1.2 DSD Playback

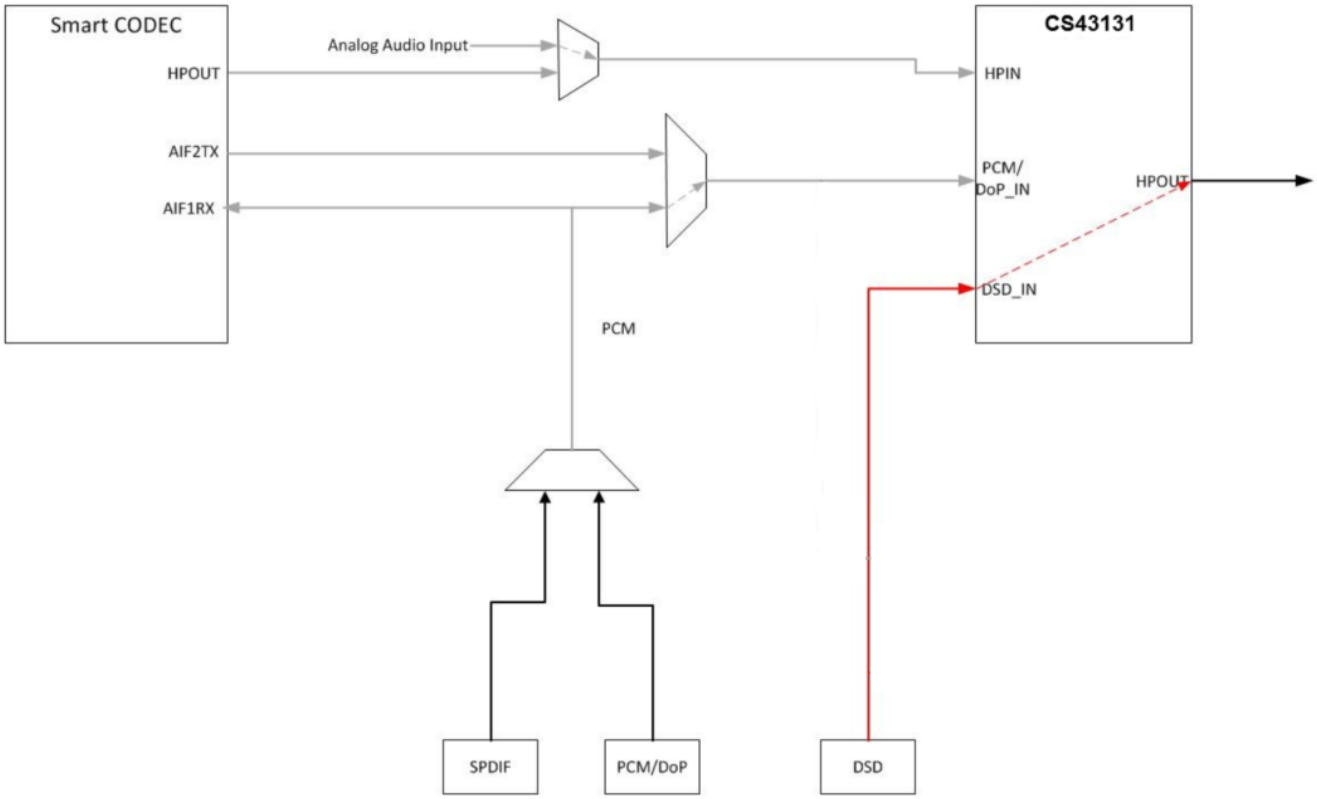

Figure 45 DSD Playback Data Flow

6.1.3 Analog Audio Playback

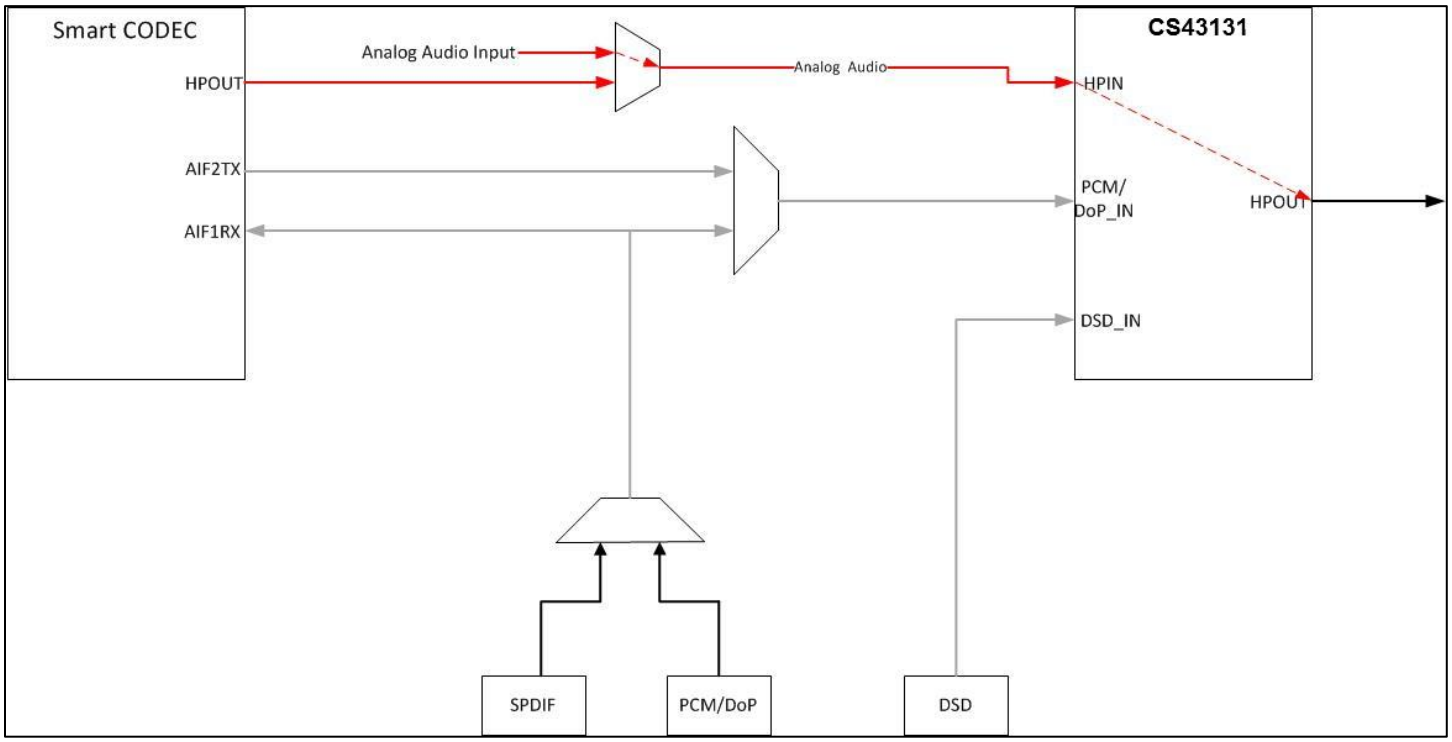

Figure 46 Analog Audio Playback Data Flow

6.2 Measuring Dynamic Range and THD+N for the CS43131

This section describes the test setup and the procedure to measure dynamic range and THD+N for CS43131.

6.2.1 Test Program Setup

The following steps show how to setup the CDB43131 for THD+N measurement. Please make sure that the CDB4131 jumpers are set to factory default mode.

1. Power up the CDB43131 by applying +5 V or VBUS through a USB connection.
2. Connect a cable from "Digital Serial IO" Transmitter port of an APx (e.g. APx555) to header J25 on CDB43131 board. There is no need to connect the MCLK signal.
3. Follow the steps described in the Quick Setup Guide to launch WISCE software and load plugins.
4. Load the profile script CDB_PCM_In_Ext_Slave from {WISCE_INSTALL_FOLDER}/Profiles/CS43131.

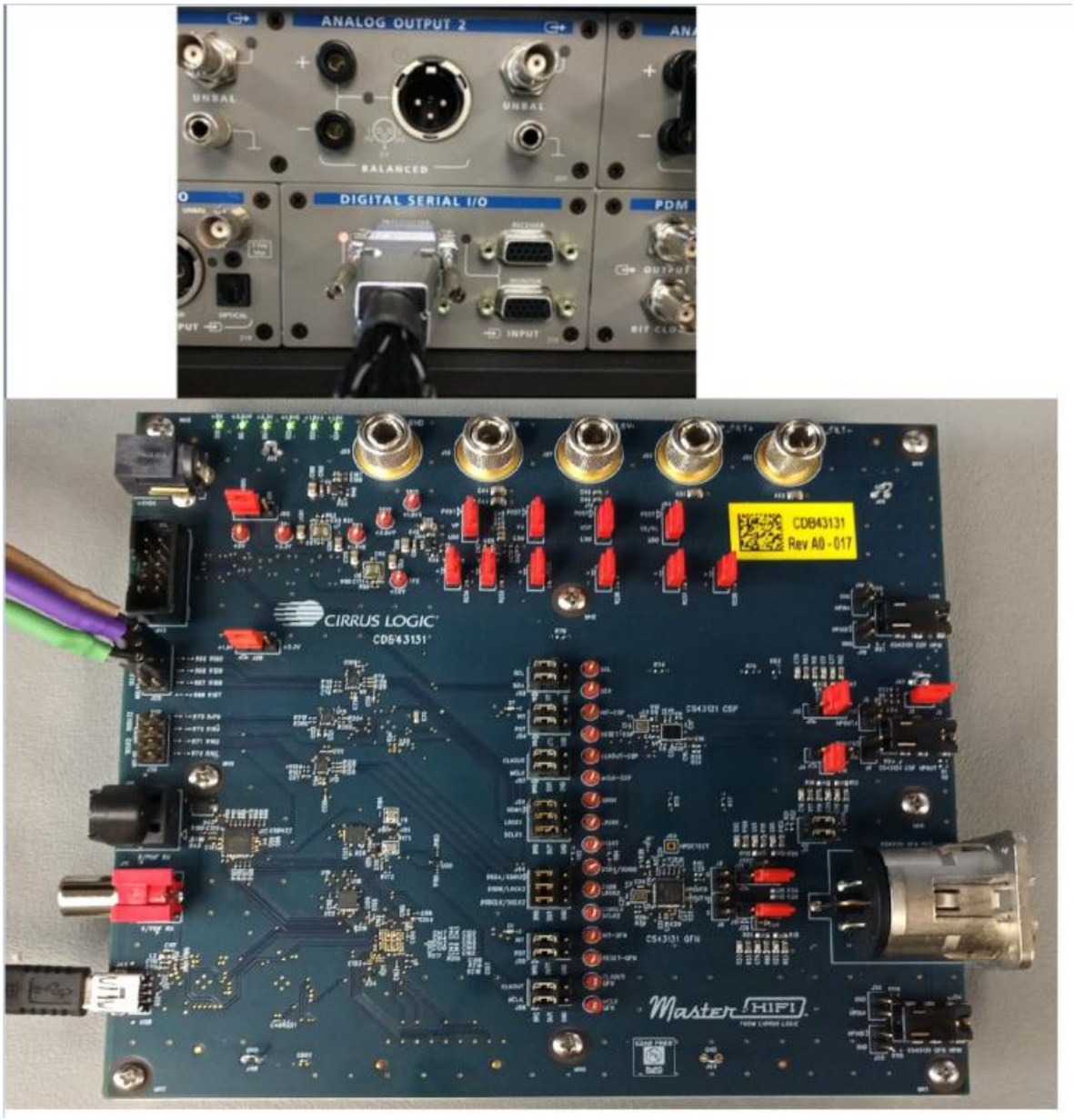

Figure 47 Test Setup

6.2.2 APx Setup

The following steps show how to configure the APx for running the tests. This procedure was tested using an APx555.

1. Run the APx software. (APx500 v4.2 if using an APx555)
2. Set the APx Output to Digital Serial and Input to Analog Balanced.
3. Set the Input Bandwidth to 20 Hz to 22.4 kHz.

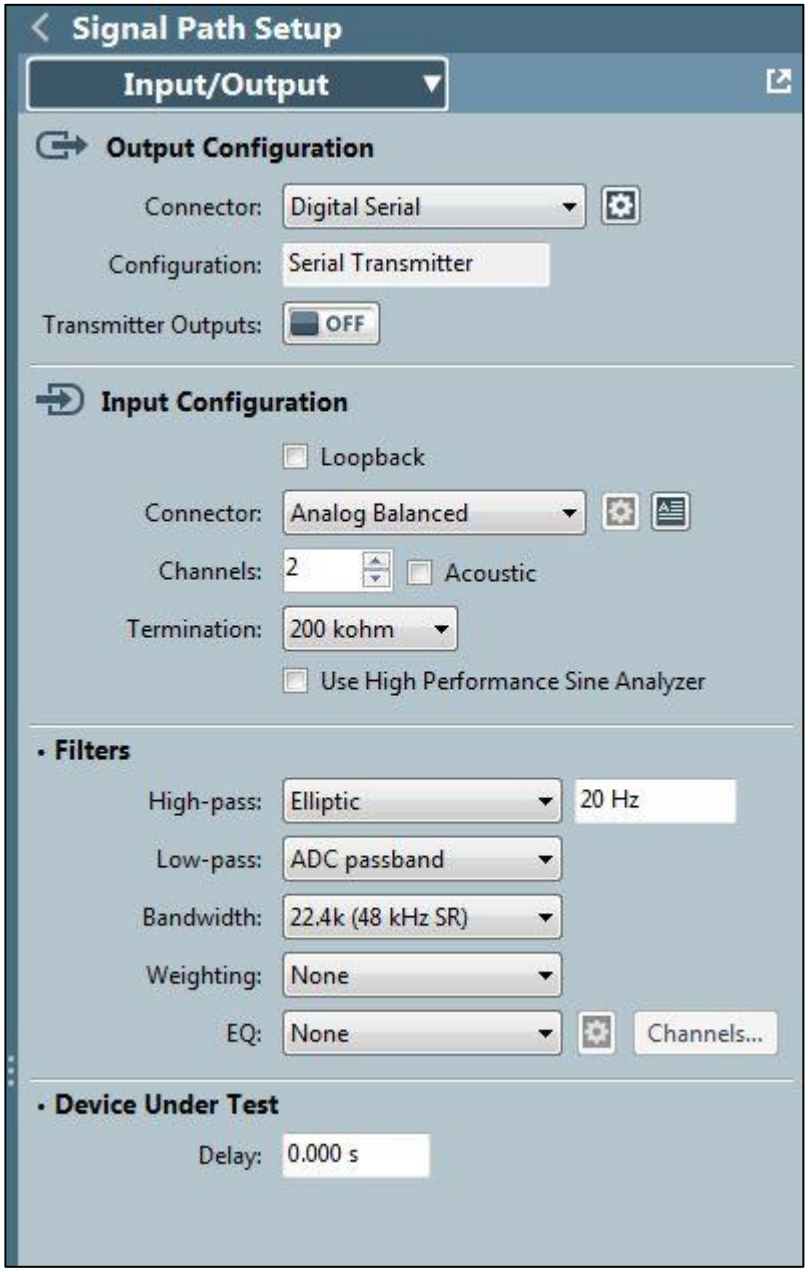

Figure 48 APx Signal Path Setup

4. In the Signal Path Setup panel, click on the settings button next to Connector drop-down menu and configure Digital Serial Settings as shown below.

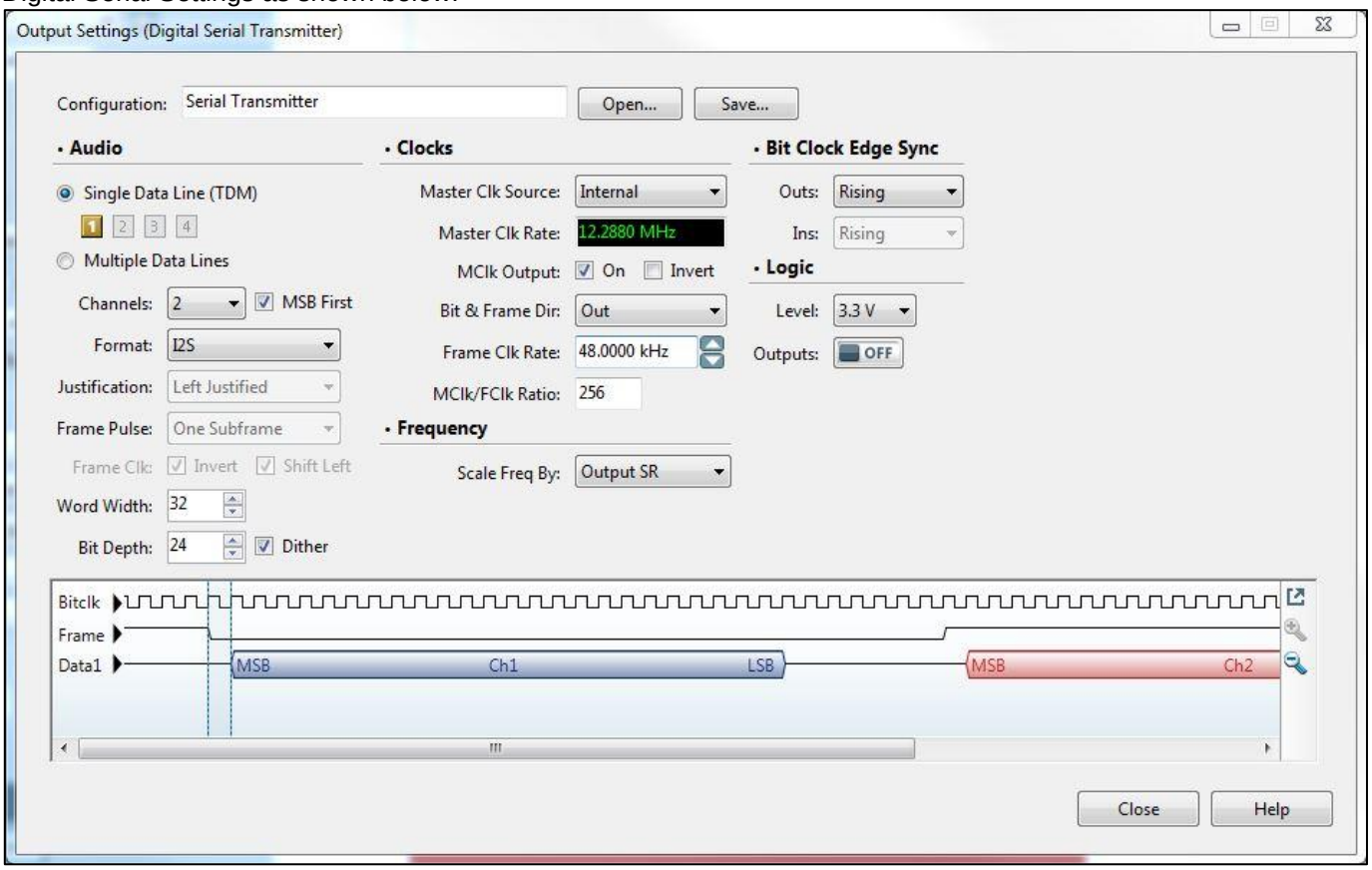

Figure 49 Digital Serial Settings

5. To launch the Dynamic Range Measurement test, click on Project-> Add Measurement -> Meters -> Dynamic Range - AES17. This will launch the dynamic range test screen.

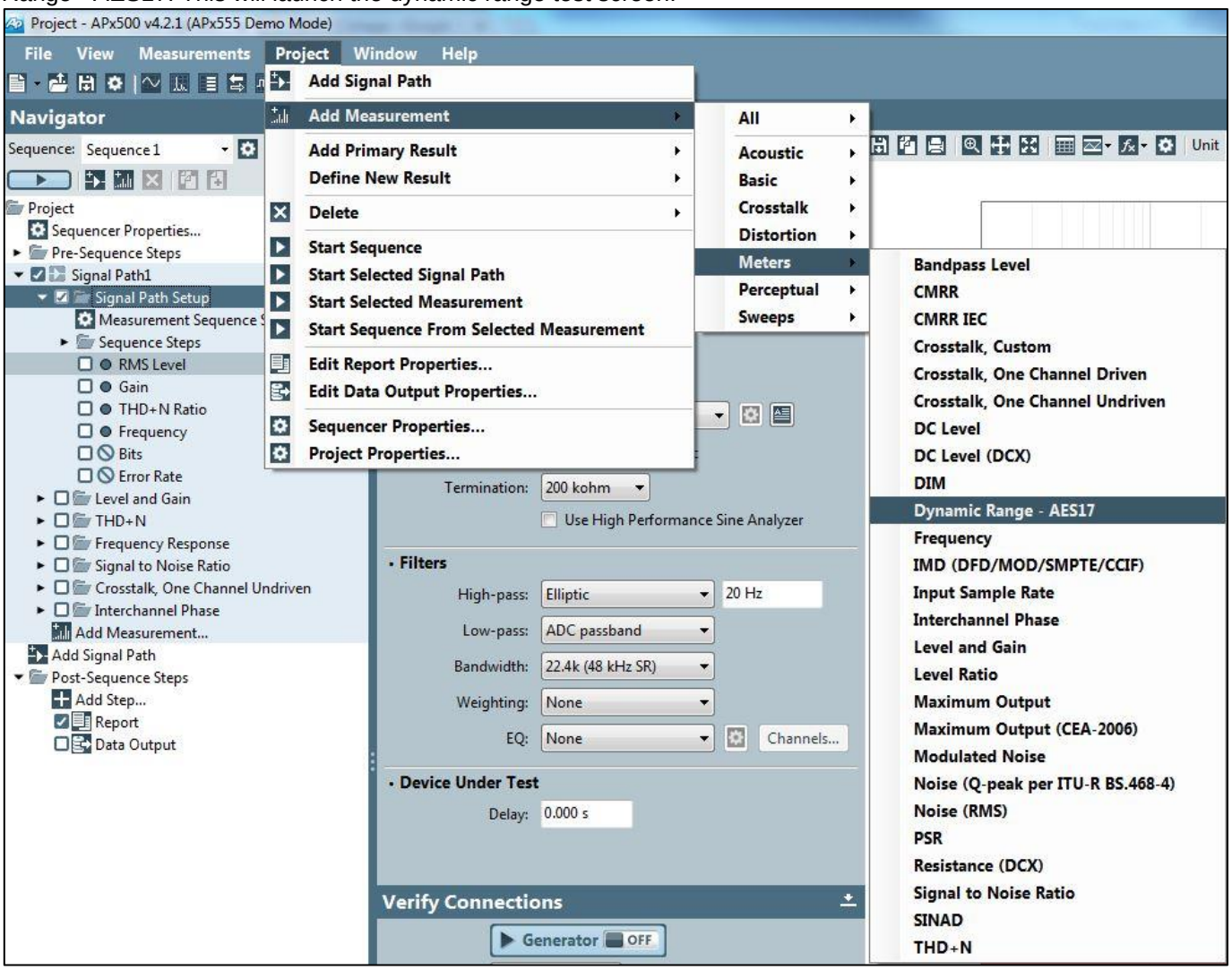

Figure 50 Launch Dynamic Range Test

6. To run the Dynamic Range Measurement test, configure the Input Level and Bandwidth as shown below. Click on the "Start" button to run the test. Dynamic Range values will be displayed for both channels.

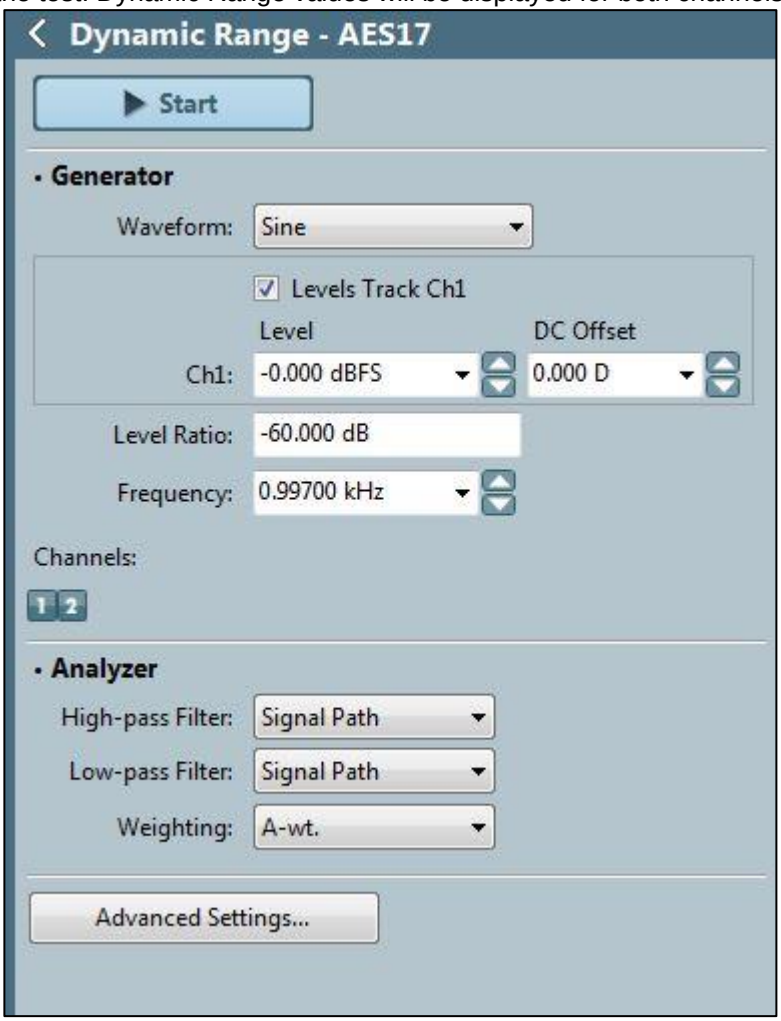

Figure 51 Dynamic Range Test

7. To launch THD+N test, click on Project-> Add Measurement -> Meters ->THD+N to launch THD+N measurement window.

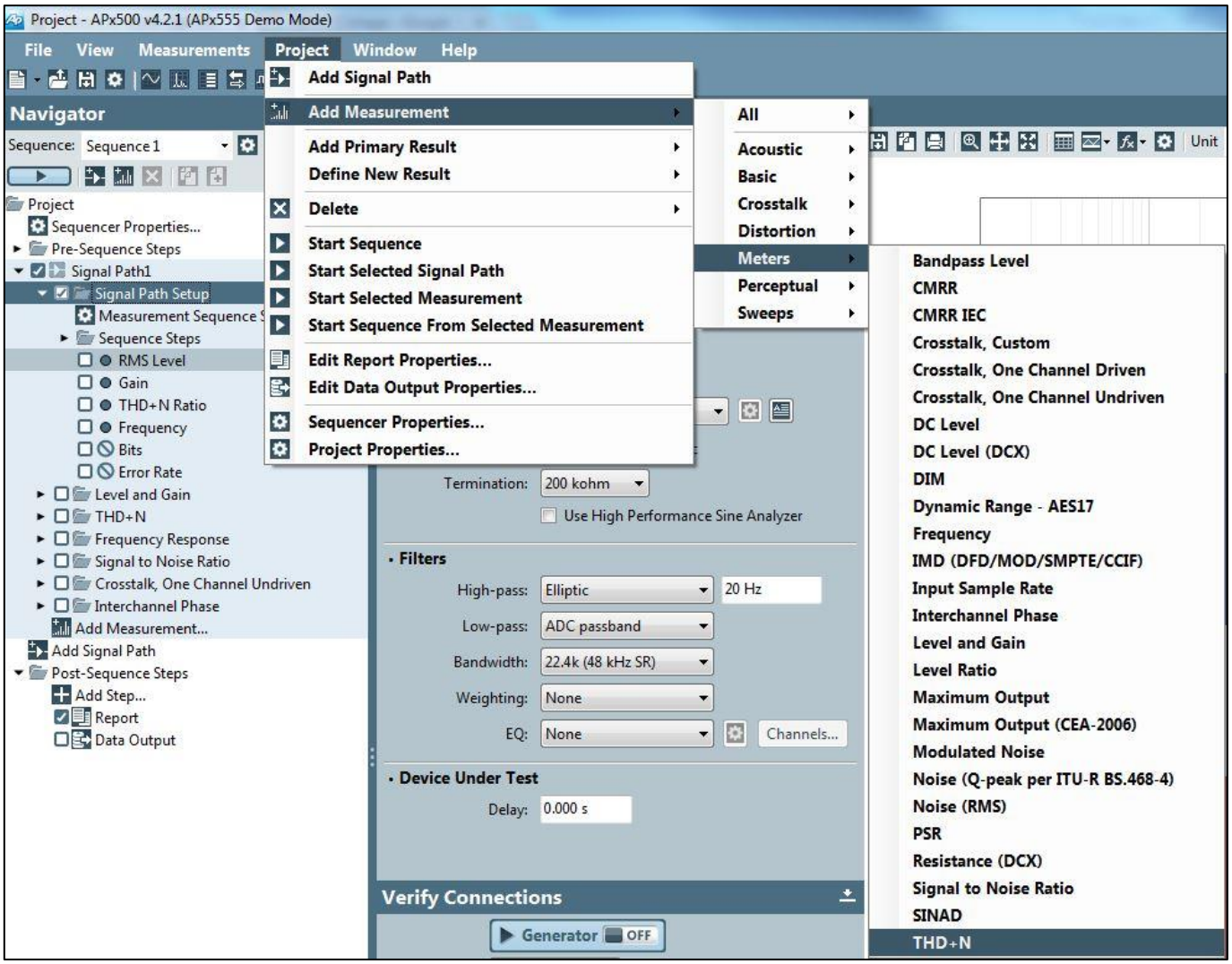

Figure 52 Launch THD+N Test

8. To run THD+N test, configure the Input Level and Bandwidth as shown below. Click on the "Generator" button to run the test. THD+N ratio will be displayed for both channels. THD+N ratio is typically displayed in Percentage (%). To display the values in dB, select "dB" from the drop-down menu next to Unit on top of the display.

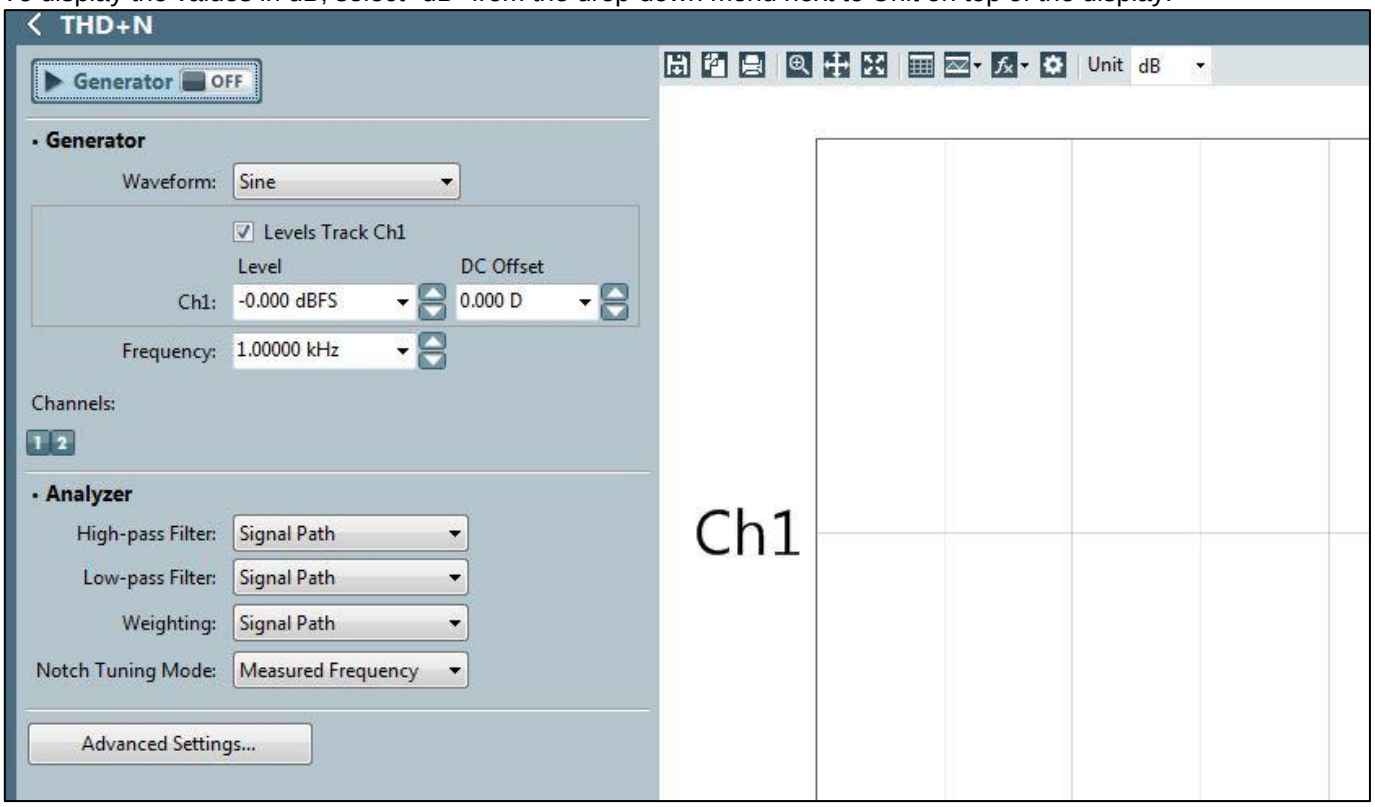

Figure 53 THD+N Measurement Settings

6.2.3 Measuring Dynamic Range for the CS43131

To measure dynamic range in the WISCE software, click File->Load and select XTAL_In_ASP_Slave_PCM_Playback_48K_1v7.txt file from {WISCE_INSTALL_FOLDER}/profiles/CS43131 to configure CS43131 for audio playback in Slave Mode. Note that this method only works when measuring the CSP device. The QFN device (with mono output) does not interface easily with the CDB-HDR-MEAS board.

6.2.3.1 Measuring Dynamic Range

The following steps show the procedure to measure dynamic range.

1. Place a jumper connecting the 600-Ω load on J15.
2. Place a jumper connecting the 600-Ω load on J4.
3. Connect a headphone cable between CSP-HPOUT(J1) and the input of the CDB-HDR-MEAS.
4. Power up the CDB-HDR-MEAS board with ±15V and GND.
5. For each channel, connect a cable between the BNC jacks (Left Channel, Right Channel) and Balanced port on Analog Inputs 1 and 2 on the APx.

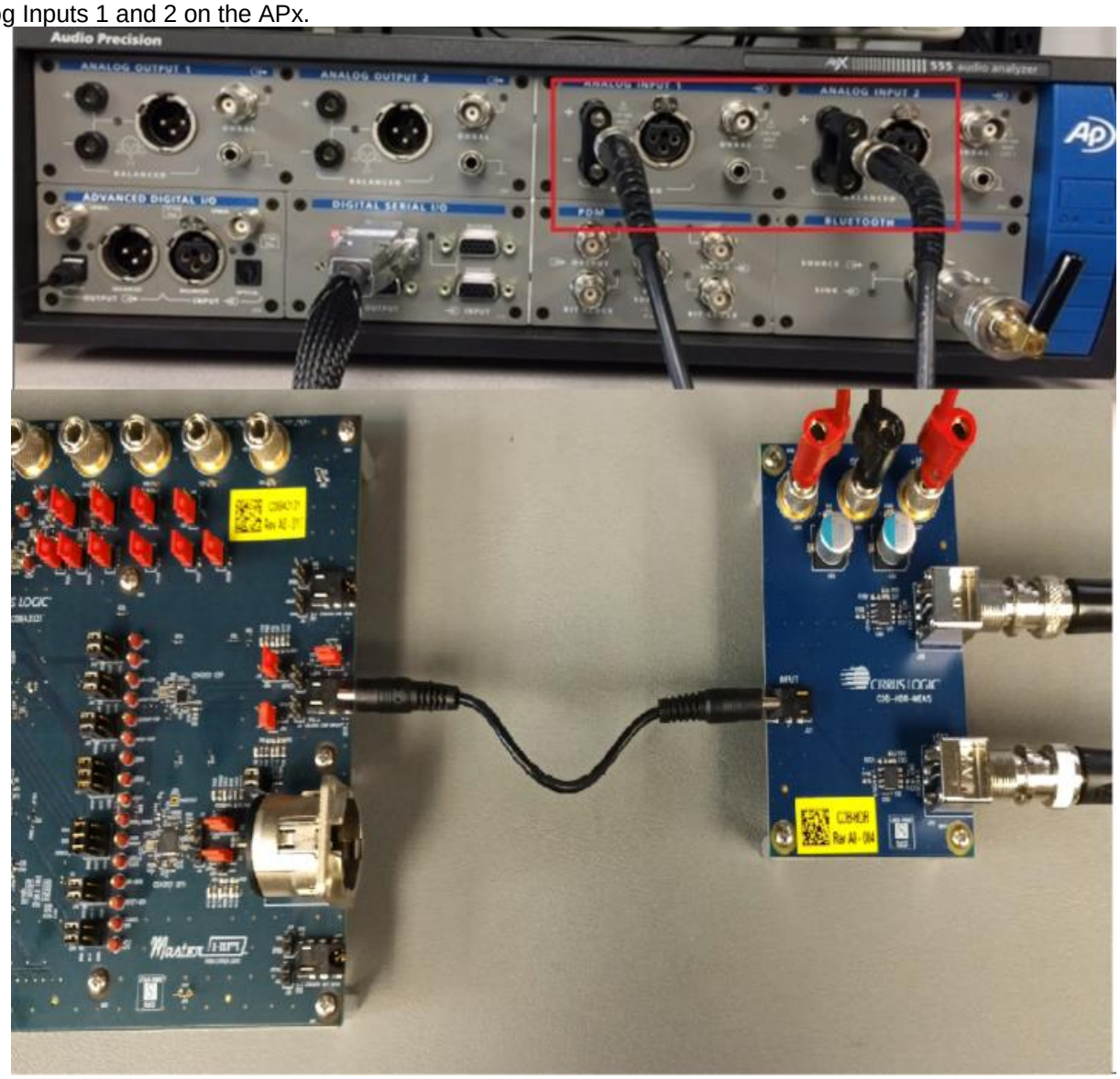

Figure 54 Dynamic Range Setup for CS43131

6. Configure APx and run Dynamic Range Measurement test as described in section 6.2.2.

6.2.4 Measuring THD+N for the CS43131

To measure THD+N in the WISCE software, click File->Load and select XTAL_In_ASP_Slave_PCM_Playback_48K_1v7.txt file from {WISCE_INSTALL_FOLDER}/profiles/CS43131 to configure CS43131 for audio playback in Slave Mode.

6.2.4.1 Measuring THD+N on CSP Device

The following steps show the procedure to measure THD+N.

1. Place a jumper connecting the 600-Ω load on J15.
2. Place a jumper connecting the 600-Ω load on J4.
3. Connect a headphone-RCA or headphone-BNC cable between CSP-HPOUT(J1) and the Balanced port on Analog inputs 1 and 2 on the APx.

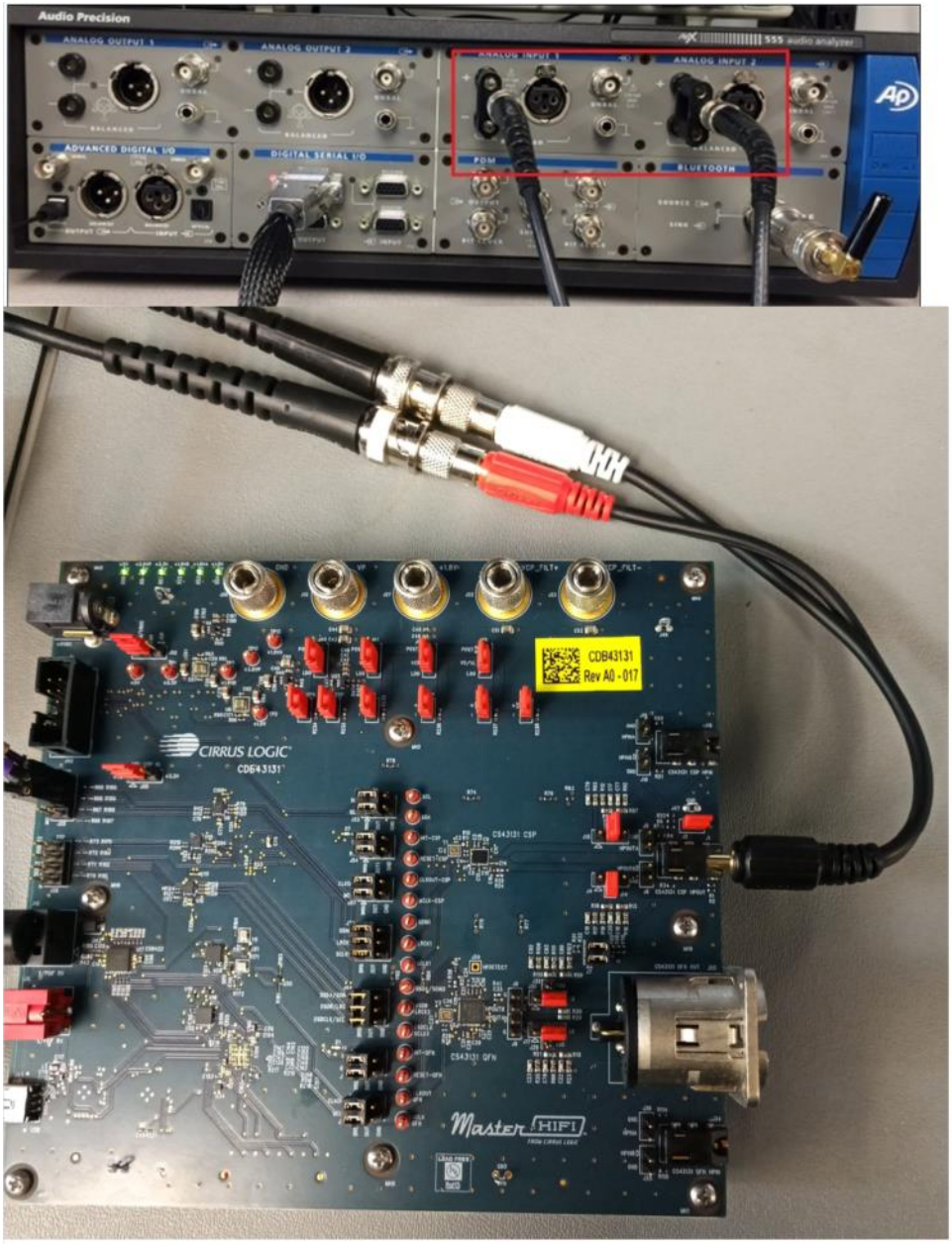

Figure 55 THD+N Measurement for CS43131 CSP

4. Configure APx and run THD+N Measurement test as described in section 6.2.2.

6.2.4.2 Measuring THD+N on QFN Device

The following steps show the procedure to measure THD+N.

1. Place a jumper connecting the 600-Ω load on J17.
2. Place a jumper connecting the 600-Ω load on J31.
3. Connect a XLR cable between QFN-OUT(J60) and the Balanced XLR port on Analog input 1 on the APx.

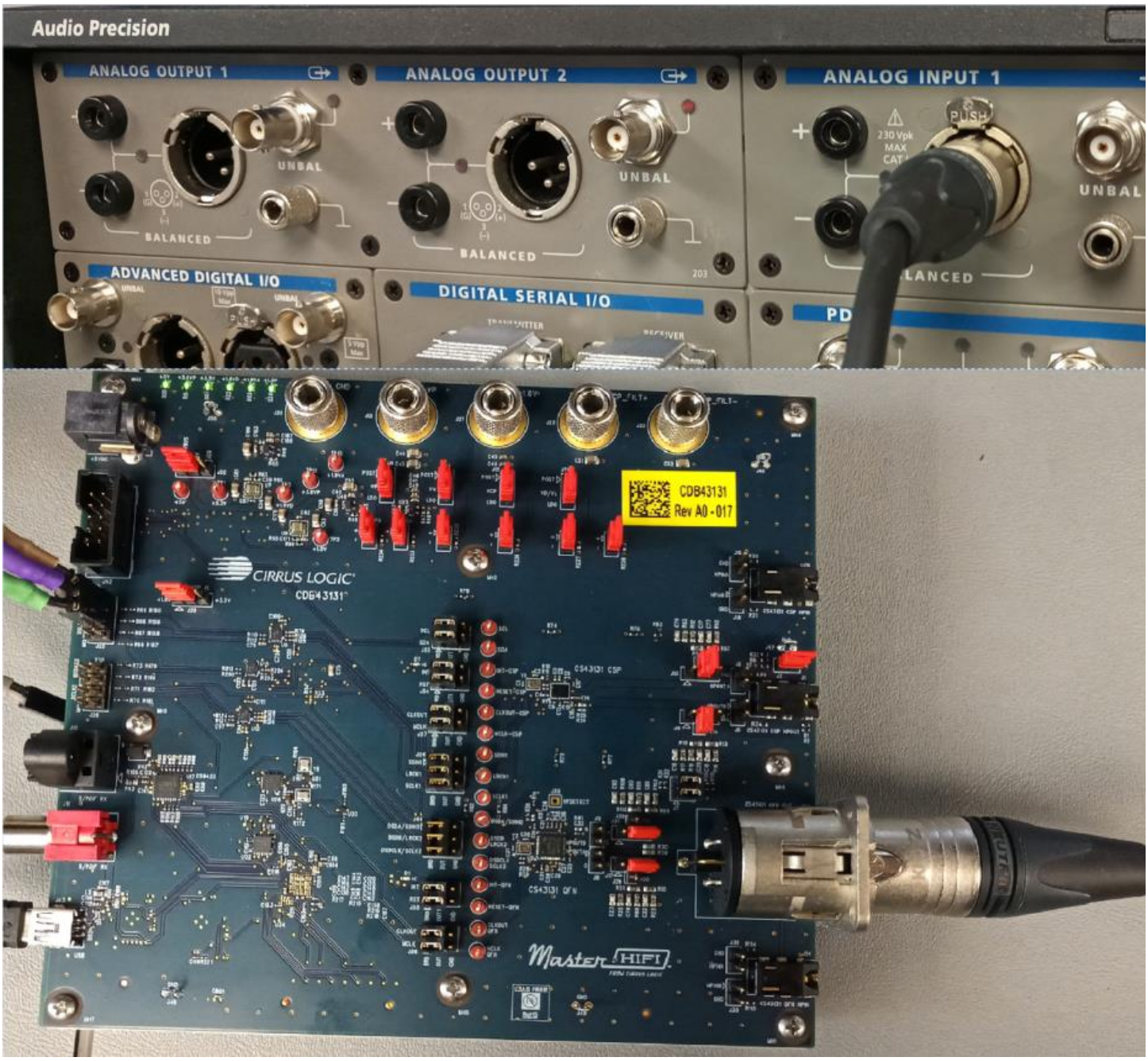

Figure 56 THD+N Measurement for CS43131 QFN

4. Configure APx and run THD+N Measurement test as described in section 6.2.2.

6.3 Measured Results

This section shows some measured dynamic range and THD+N results from the CDB43131K kit.

6.3.1 Test Waveforms

All test waveforms were generated using the APx Waveform Generator Utility that can be found on the Audio Precision website.

Table 11 Test Waveforms

Test Type	Waveform Name	Sample Rates	Resolution	Channels
THD+N	Reference Level (0 dB)	44.1 kHz	24 bit	2
DNR	Dynamic Range (1 kHz)	44.1 kHz	24 bit	2

6.3.2 THD+N Results

The table below lists measured THD+N results using the test waveforms under varying load and full-scale voltage conditions.

Table 12 Measured THD+N Results

Output Load (R_L)	Full Scale Voltage (VRMS)	Channel	Datasheet Spec (Typical)	Measured Result [1]
600	1.7	A	–113 dB	–113.0 dB
		B		–113.2 dB
		XLR		–114.1 dB
32	1.0	A	–110 dB	–108.5 dB
		B		–107.7 dB
		XLR		–111.8 dB
16	0.5	A	–100 dB	–103.8 dB
		B		–103.5 dB
		XLR		–108.8 dB

Notes:

1. Refer to the CS43131 data sheet for test conditions.

6.3.3 Dynamic Range Results

The table below lists measured DNR results using the test waveforms under varying load and full-scale voltage conditions.

Table 13 Measured DNR Results

Output Load (R_L)	Full Scale Voltage (VRMS)	Channel	Datasheet Spec (Typical)	Measured Result [1]
600	1.7	A	130 dB	130.5 dB [2]
		B		130.4 dB [2]
		XLR		131.6 dB
32	1.0	A	125 dB	122.5 dB
		B		122.4 dB
		XLR		126.8 dB
16	0.5	A	119 dB	116.5 dB
		B		116.5 dB
		XLR		120.9 dB

Notes:

1. Refer to CS43131 data sheet for test conditions.
2. Tested with the CDB-HDR-MEAS Board.

7 Revision History

Revision	Changes
DB1 JUL '18	• Initial release
DB2 SEP '18	• Updated kit name to CDB43131K • Updated status LED table

Contacting Cirrus Logic Support

For all product questions and inquiries, contact a Cirrus Logic Sales Representative.
To find one nearest you, go to www.cirrus.com.

IMPORTANT NOTICE

The products and services of Cirrus Logic International (UK) Limited; Cirrus Logic, Inc.; and other companies in the Cirrus Logic group (collectively either "Cirrus Logic" or "Cirrus") are sold subject to Cirrus Logic's terms and conditions of sale supplied at the time of order acknowledgment, including those pertaining to warranty, indemnification, and limitation of liability. Software is provided pursuant to applicable license terms. Cirrus Logic reserves the right to make changes to its products and specifications or to discontinue any product or service without notice. Customers should therefore obtain the latest version of relevant information from Cirrus Logic to verify that the information is current and complete. Testing and other quality control techniques are utilized to the extent Cirrus Logic deems necessary. Specific testing of all parameters of each device is not necessarily performed. In order to minimize risks associated with customer applications, the customer must use adequate design and operating safeguards to minimize inherent or procedural hazards. Cirrus Logic is not liable for applications assistance or customer product design. The customer is solely responsible for its product design, including the specific manner in which it uses Cirrus Logic components, and certain uses or product designs may require an intellectual property license from a third party. Features and operations described herein are for illustrative purposes only and do not constitute a suggestion or instruction to adopt a particular product design or a particular mode of operation for a Cirrus Logic component.

CERTAIN APPLICATIONS USING SEMICONDUCTOR PRODUCTS MAY INVOLVE POTENTIAL RISKS OF DEATH, PERSONAL INJURY, OR SEVERE PROPERTY OR ENVIRONMENTAL DAMAGE ("CRITICAL APPLICATIONS"). CIRRUS LOGIC PRODUCTS ARE NOT DESIGNED, AUTHORIZED OR WARRANTED FOR USE IN PRODUCTS SURGICALLY IMPLANTED INTO THE BODY, AUTOMOTIVE SAFETY OR SECURITY DEVICES, NUCLEAR SYSTEMS, LIFE SUPPORT PRODUCTS OR OTHER CRITICAL APPLICATIONS. INCLUSION OF CIRRUS LOGIC PRODUCTS IN SUCH APPLICATIONS IS UNDERSTOOD TO BE FULLY AT THE CUSTOMER'S RISK AND CIRRUS LOGIC DISCLAIMS AND MAKES NO WARRANTY, EXPRESS, STATUTORY OR IMPLIED, INCLUDING THE IMPLIED WARRANTIES OF MERCHANTABILITY AND FITNESS FOR PARTICULAR PURPOSE, WITH REGARD TO ANY CIRRUS LOGIC PRODUCT THAT IS USED IN SUCH A MANNER. IF THE CUSTOMER OR CUSTOMER'S CUSTOMER USES OR PERMITS THE USE OF CIRRUS LOGIC PRODUCTS IN CRITICAL APPLICATIONS, CUSTOMER AGREES, BY SUCH USE, TO FULLY INDEMNIFY CIRRUS LOGIC, ITS OFFICERS, DIRECTORS, EMPLOYEES, DISTRIBUTORS AND OTHER AGENTS FROM ANY AND ALL LIABILITY, INCLUDING ATTORNEYS' FEES AND COSTS, THAT MAY RESULT FROM OR ARISE IN CONNECTION WITH THESE USES.

This document is the property of Cirrus Logic, and you may not use this document in connection with any legal analysis concerning Cirrus Logic products described herein. No license to any technology or intellectual property right of Cirrus Logic or any third party is granted herein, including but not limited to any patent right, copyright, mask work right, or other intellectual property rights. Any provision or publication of any third party's products or services does not constitute Cirrus Logic's approval, license, warranty or endorsement thereof. Cirrus Logic gives consent for copies to be made of the information contained herein only for use within your organization with respect to Cirrus Logic integrated circuits or other products of Cirrus Logic, and only if the reproduction is without alteration and is accompanied by all associated copyright, proprietary and other notices and conditions (including this notice). This consent does not extend to other copying such as copying for general distribution, advertising or promotional purposes, or for creating any work for resale. This document and its information is provided "AS IS" without warranty of any kind (express or implied). All statutory warranties and conditions are excluded to the fullest extent possible. No responsibility is assumed by Cirrus Logic for the use of information herein, including use of this information as the basis for manufacture or sale of any items, or for infringement of patents or other rights of third parties. Cirrus Logic, Cirrus, the Cirrus Logic logo design, WISCE, Halo Core, and SoundClear are among the trademarks of Cirrus Logic. Other brand and product names may be trademarks or service marks of their respective owners.

Copyright © 2018 Cirrus Logic, Inc. and Cirrus Logic International Semiconductor Ltd. All rights reserved.

Windows is a registered trademark of Microsoft Corporation.